# Collecting / Submitting height and instrument information

Data Team: Deb Agarwal, You-Wei Cheah, **Danielle Svehla Christianson**, Housen Chu,
Rachel Hollowgrass, Marty Humphrey, Fianna O'Brien, Yeongshnn Ong, Gilberto Pastorello

Data-Tech Workshop 2019, Berkeley, CA

1. Measure height (+) / depth (-) of instruments from local surface
2. Assign / Match variable positional qualifiers to instruments
3. Enter height & instrument model via online Variable Information Tool
4. Confirm via Measurement Height temporary data product

AMERIFLUX MANAGEMENT PROJECT

BERKELEY LAB
Lawrence Berkeley National Laboratory

Terrestrial Ecosystem SCIENCE

U.S. DEPARTMENT OF ENERGY | Office of Science

# 1 Measure height / depth from local surface

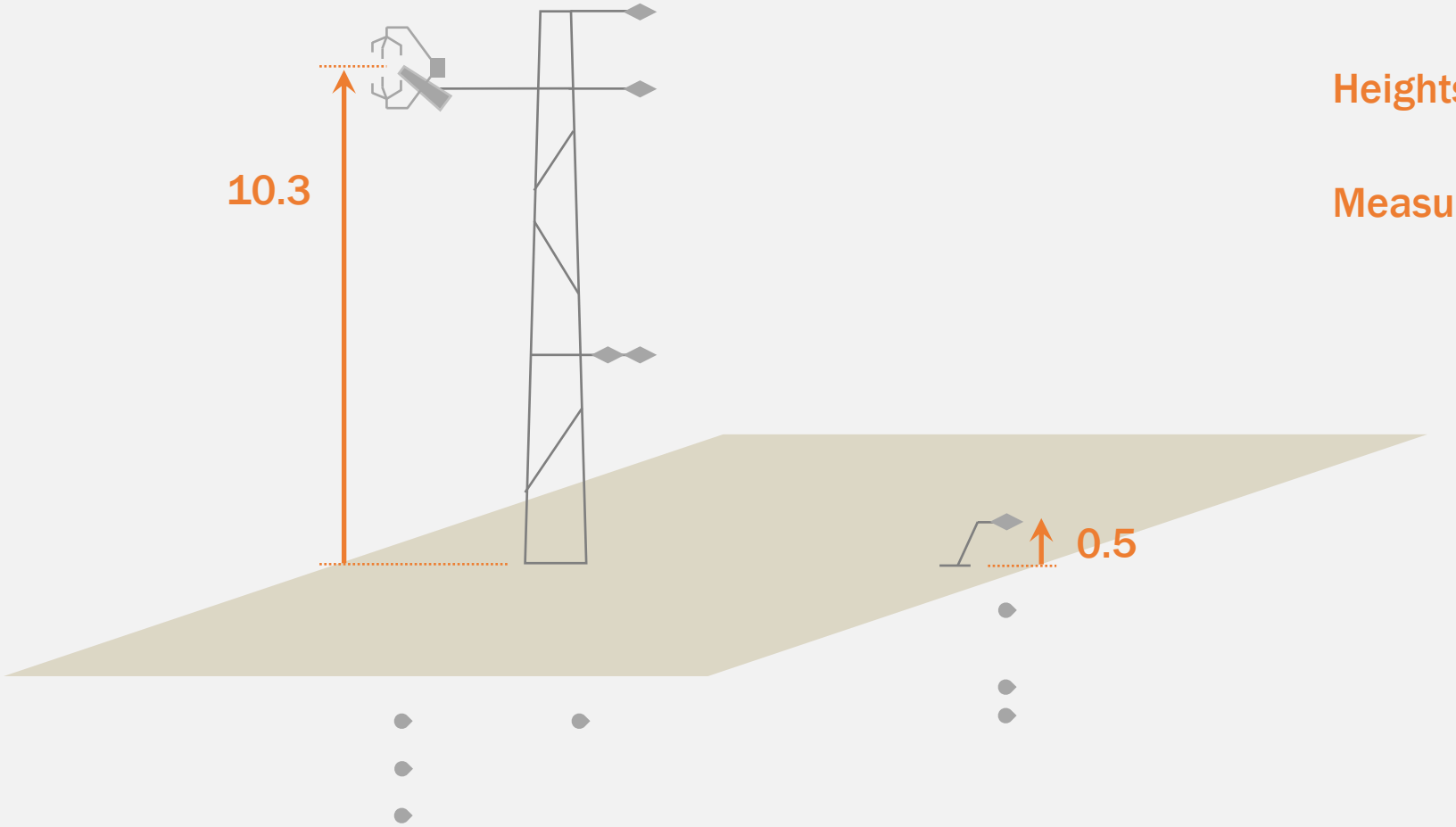


Use meters

Heights are positive!

Measure to average observation position

# 1 Measure height / depth from local surface

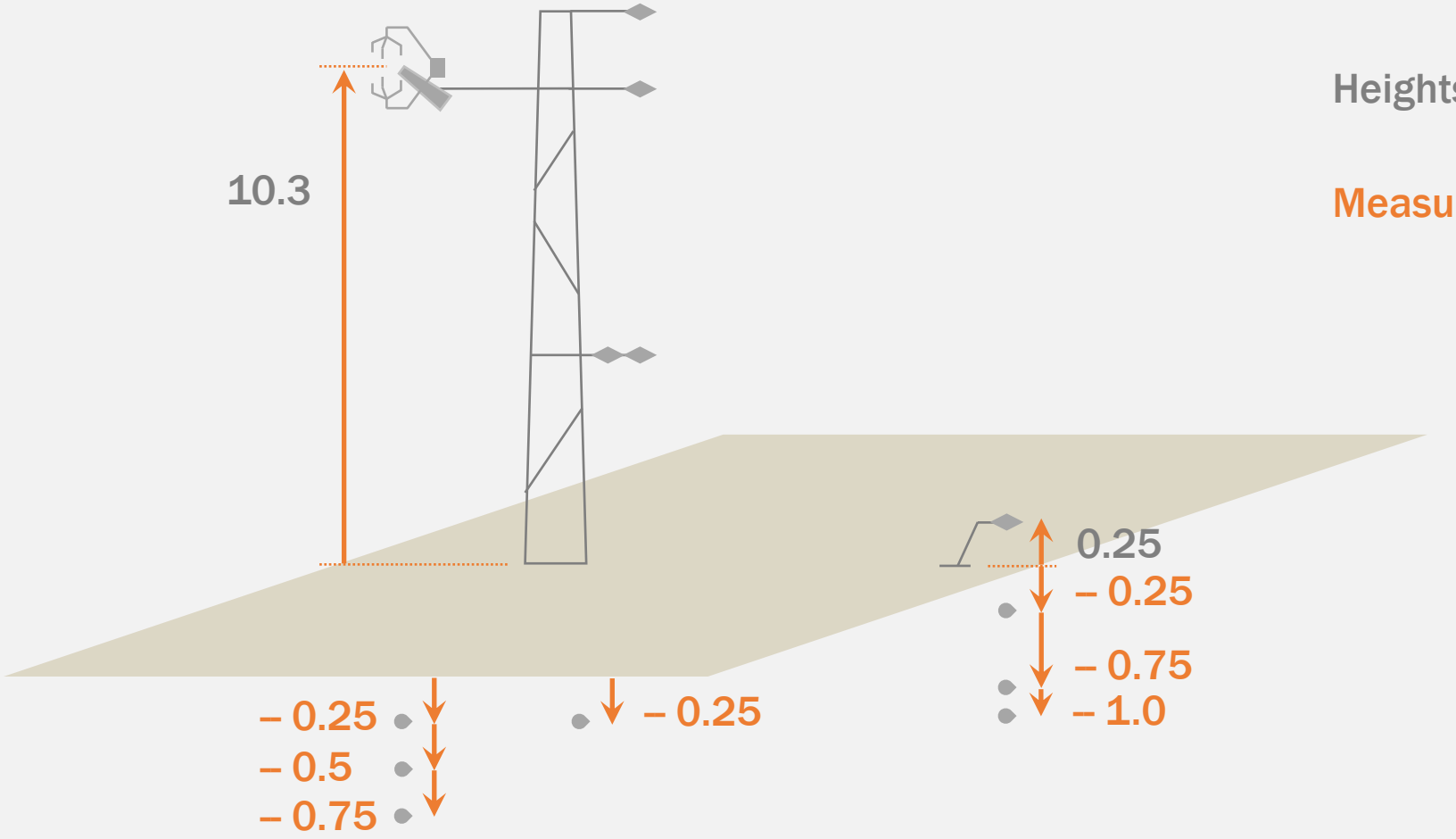


Use meters

Heights are positive! Depths are negative!

Measure to average observation position

## 2 FP Standard: Variables have 2 parts

| Base Name | Qualifiers |
| --- | --- |

<Base name>_<General>_<Positional or Aggregation>

FC_PI_F_1_1_1

CO2_1_1_A

TA_4

# 2 FP Standard: Base names (and units) described online

**Data Variables: https://ameriflux.lbl.gov/data/aboutdata/data-variables/**

## 2. Data Variable: Base names

Base names indicate fundamental quantities that are either measured or calculated / derived. They can also indicate quantified quality information.

Table 1. Base names

| Name |
|---|
| ***TIMEKEEPING*** |
| TIMESTAMP_STAR |
| TIMESTAMP_END |
| ***BIOLOGICAL*** |
| DBH |
| LEAF_WET |
| SAP_DT |
| SAP_FLOW |

| | | |
|---|---|---|
| ***GASES*** | | |
| CH4 | Methane (CH4) mole fraction in wet air | nmolCH4 mol-1 |
| CO | Carbon Monoxide (CO) mole fraction in wet air | nmolCO mol-1 |
| CO2 | Carbon Dioxide (CO2) mole fraction in wet air | µmolCO2 mol-1 |
| CO2C13 | Stable isotopic composition of CO2 - C13 (i.e., d13C of CO2) | ‰ (permil) |
| CO2_SIGMA | Standard deviation of carbon dioxide mole fraction in wet air | µmolCO2 mol-1 |
| FC | Carbon Dioxide (CO2) turbulent flux (no storage correction) | µmolCO2 m-2 s-1 |
| FCH4 | Methane (CH4) turbulent flux (no storage correction) | nmolCH4 m-2 s-1 |
| FN2O | Nitrous oxide (N2O) turbulent flux (no storage correction) | nmolN2O m-2 s-1 |
| FNO | Nitric oxide (NO) turbulent flux (no storage correction) | nmolNO m-2 s-1 |
| FNO2 | Nitrogen dioxide (NO2) turbulent flux (no storage correction) | nmolNO2 m-2 s-1 |
| FO3 | Ozone (O3) turbulent flux (no storage correction) | nmolO3 m-2 s-1 |
| H2O | Water (H2O) vapor mole fraction | mmolH2O mol-1 |

# 2 FP Standard: General, Positional, Aggregation qualifiers are appended

Data Variables: https://ameriflux.lbl.gov/data/aboutdata/data-variables/

## 3. Data Variable: Qualifiers

Qualifiers are suffixes appended to variable base names that provide additional information about the variable. For example, the _F qualifier in the variable label TS_F indicates that soil temperature (TS) has been gap-filled by the network.

Multiple qualifiers can be added, and they must **follow the order in which they are presented here**.

In general, qualifiers are applied at the network level (network teams only) and should not be used in data uploads by tower teams. Exceptions are noted in the qualifier descriptions below.

### 3.1. Qualifiers: General

General qualifiers indicate additional information about a variable.

#### 3.1.1. _PI (Provided by PI / tower team)

- Use: network team only
- Details: _PI indicates a variable that has been QA/QC filtered or gap-filled by the tower team, independently of network QA/QC or gap-filling processing.

#### 3.1.2. _QC (Quality control flag)

- Use: network team only
- Details: _QC reports quality checks resulting from standard and centralized QA/QC of the data.

## 2 FP Standard: first General, then Positional or Aggregation Qualifiers

| Base Name | Qualifiers |
| --- | --- |
| | General |
| | Positional / Aggregation |
| | _*H*_*V*_*R* = Single sensor / position |
| | _*H*_*V*_A = Replicate aggregation |
| | _# = Layer aggregation |

# 2 FP Standard: Assigning Positional and Aggregation Qualifiers

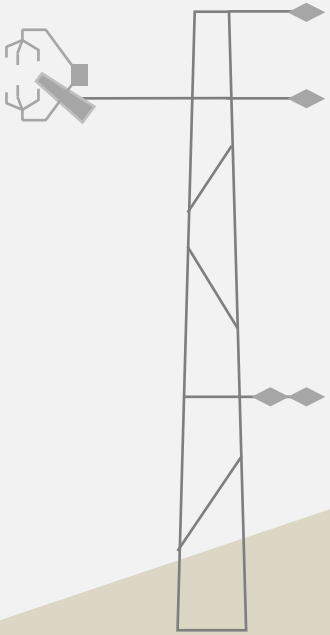

# 2 FP Standard: Assigning Positional and Aggregation Qualifiers

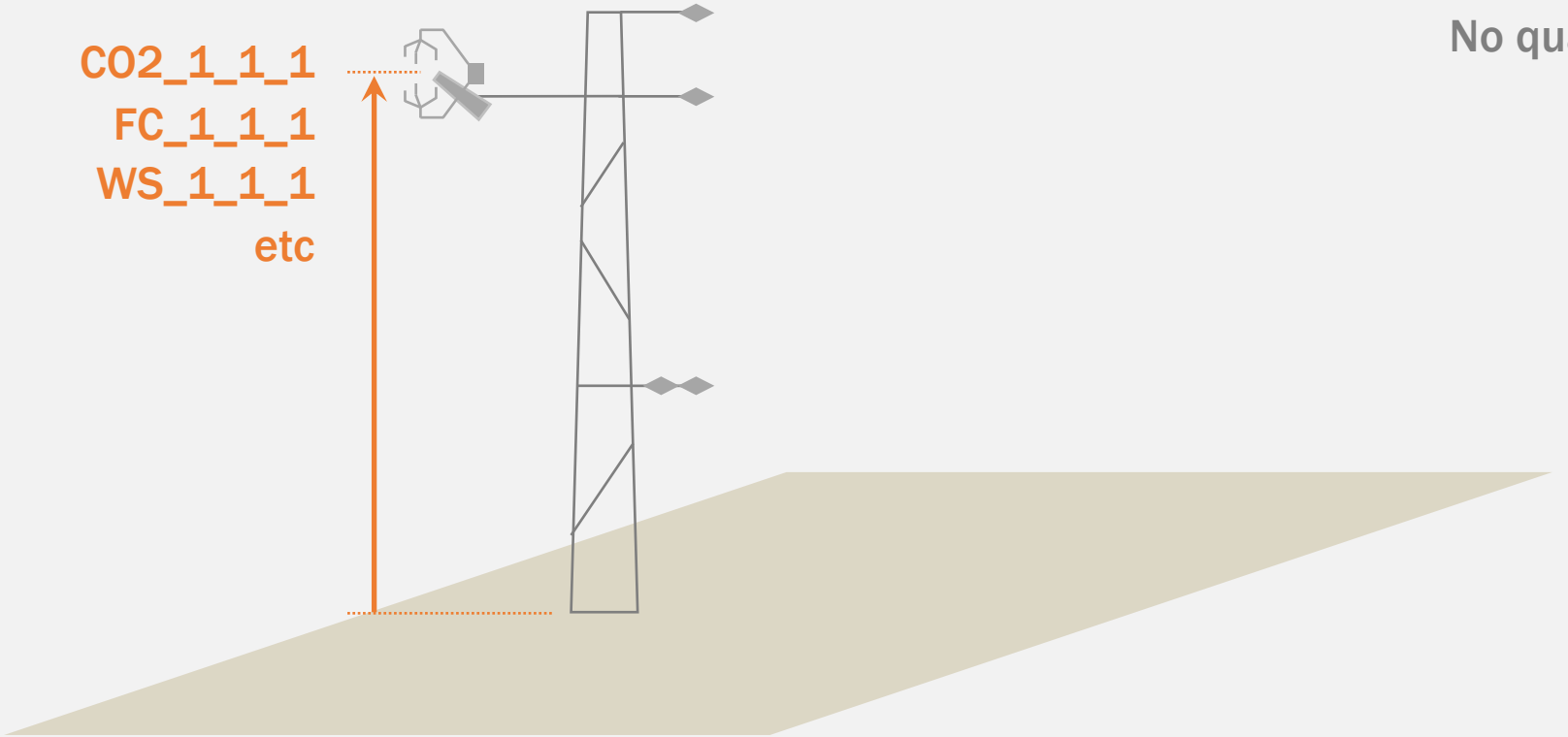


**Positional qualifier: *_H_V_R***

No qualifier is assumed to be _1_1_1

# 2 FP Standard: Assigning Positional and Aggregation Qualifiers

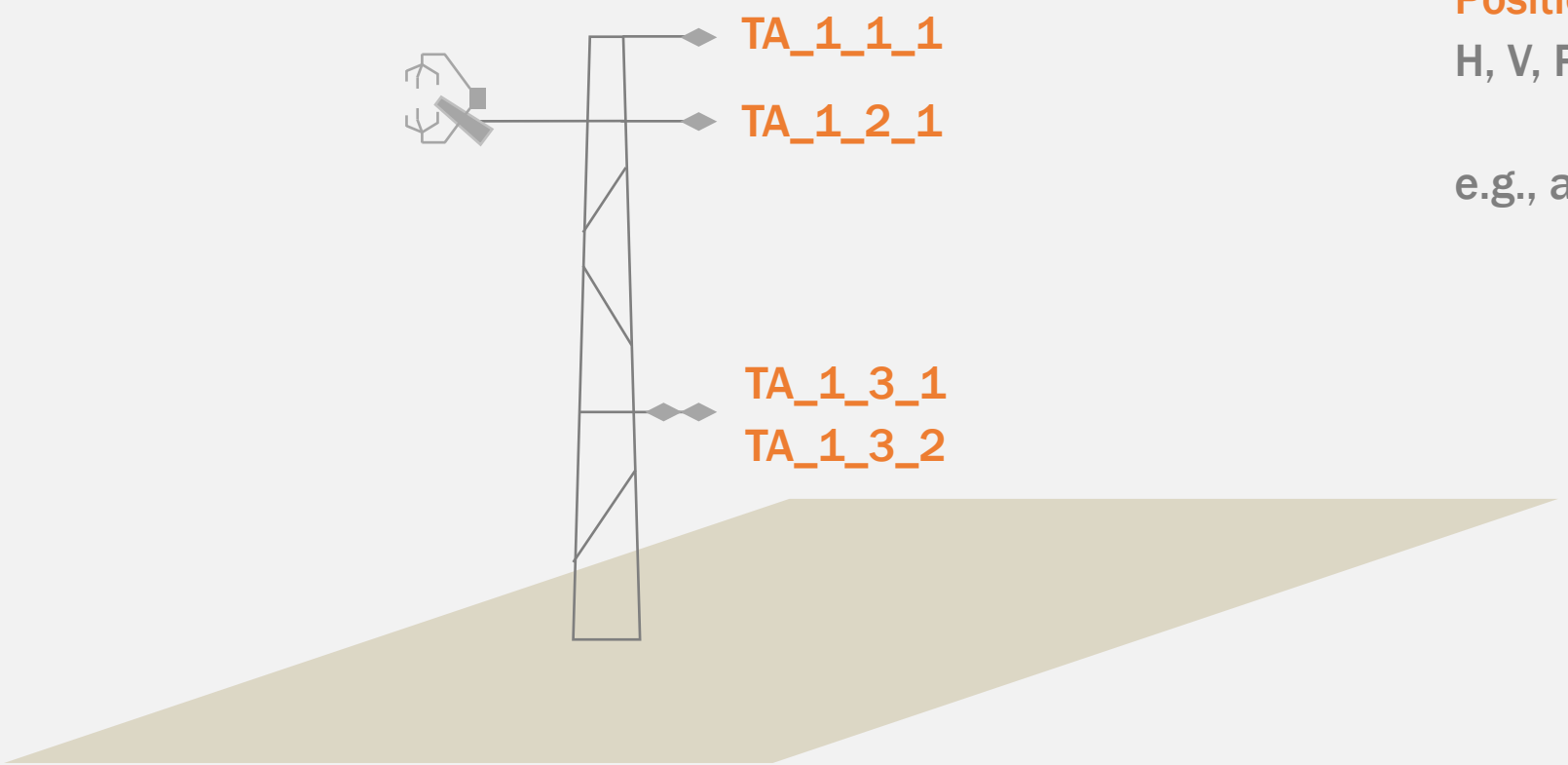


**Positional qualifier: *_H_V_R***

H, V, R are relative indices

e.g., a vertical profile

# 2 FP Standard: Assigning Positional and Aggregation Qualifiers

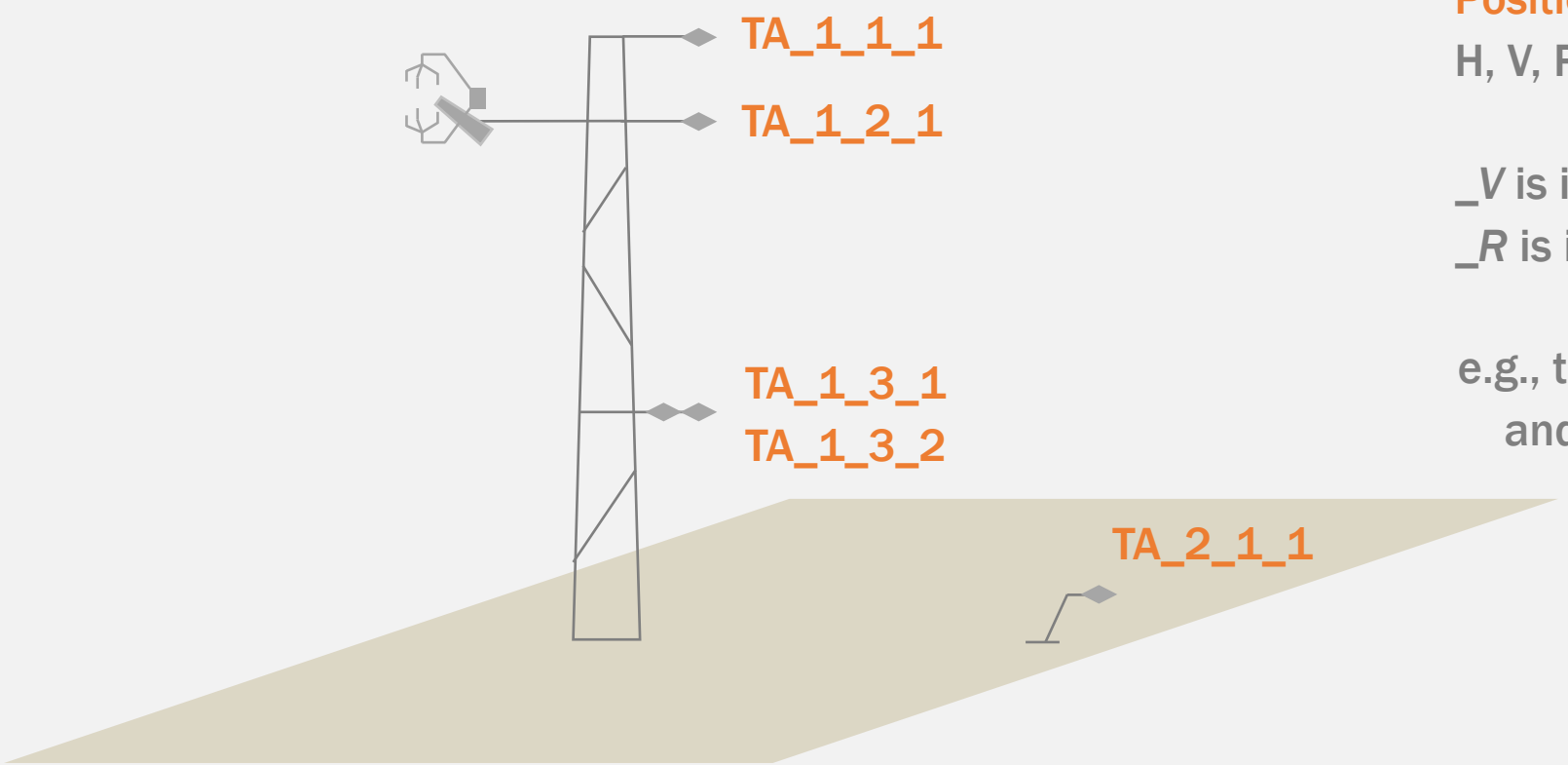


**Positional qualifier: *_H_V_R***

H, V, R are relative indices

*_V* is independent of other *_H*

*_R* is independent of other *_H_V*

e.g., the 2nd H position resets the V and R indices

# 2 FP Standard: Assigning Positional and Aggregation Qualifiers

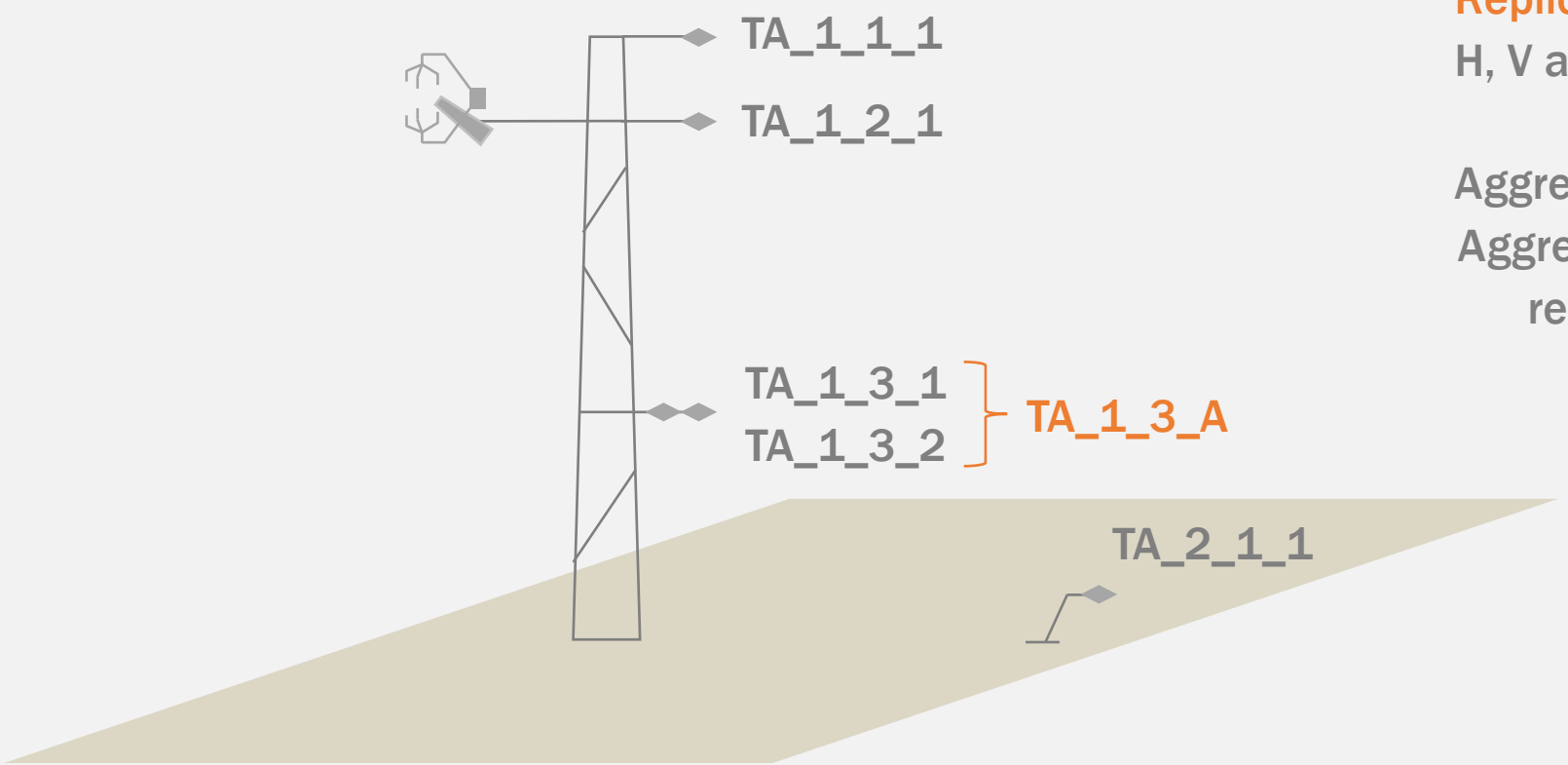


**Replicate aggregation: _*H*_*V*_A**

H, V are relative indices

Aggregation can mean an average

Aggregation can mean filled by a replicate sensor

# 2 FP Standard: Assigning Positional and Aggregation Qualifiers

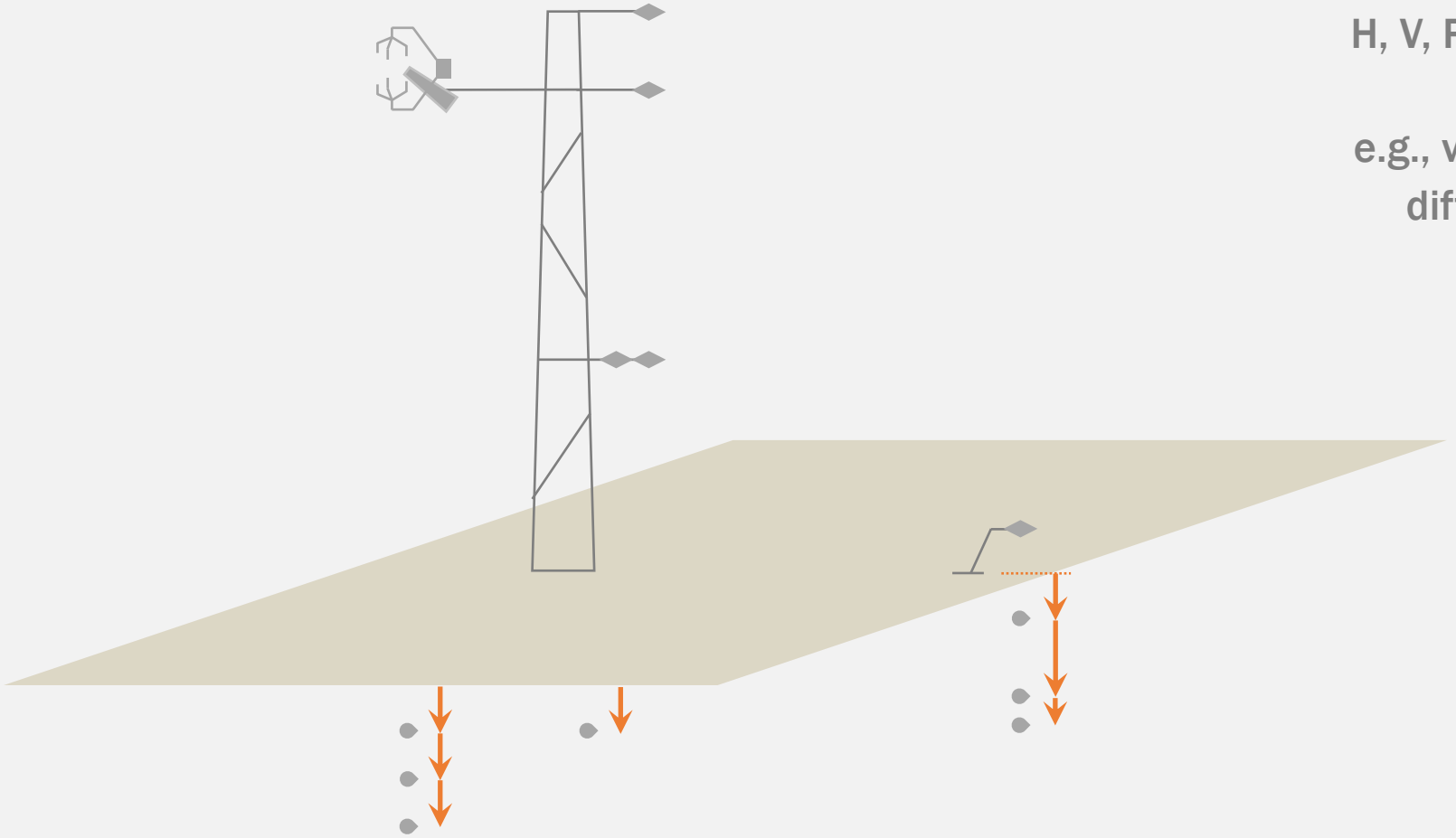

**Positional qualifier: *_H_V_R***

H, V, R are relative indices

e.g., vertical profile located at different horizontal positions

# 2 FP Standard: Assigning Positional and Aggregation Qualifiers

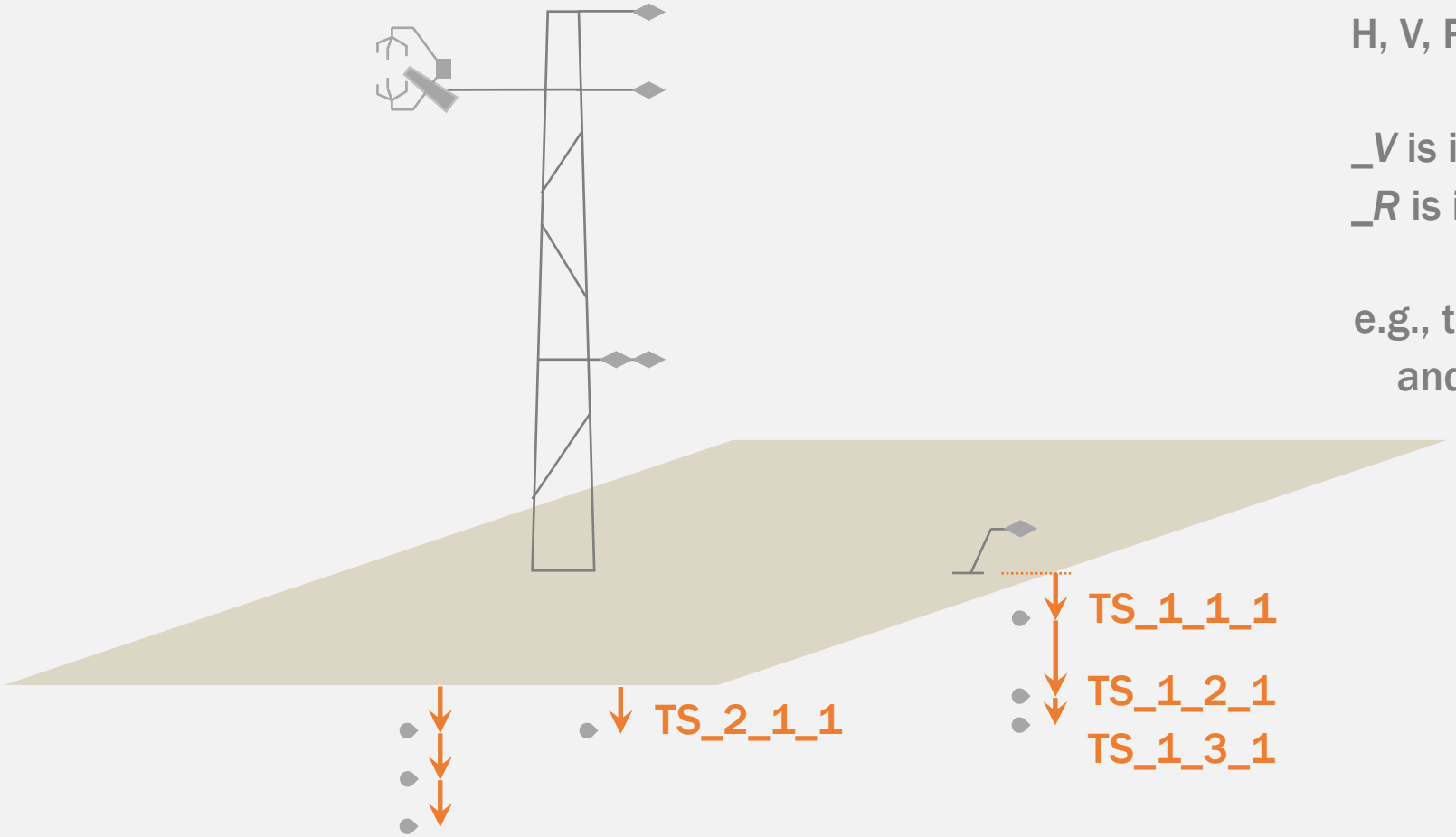


**Positional qualifier: *_H_V_R***

H, V, R are relative indices

*_V* is independent of other *_H*

*_R* is independent of other *_H_V*

e.g., the 2nd H position resets the V and R indices

# 2 FP Standard: Assigning Positional and Aggregation Qualifiers

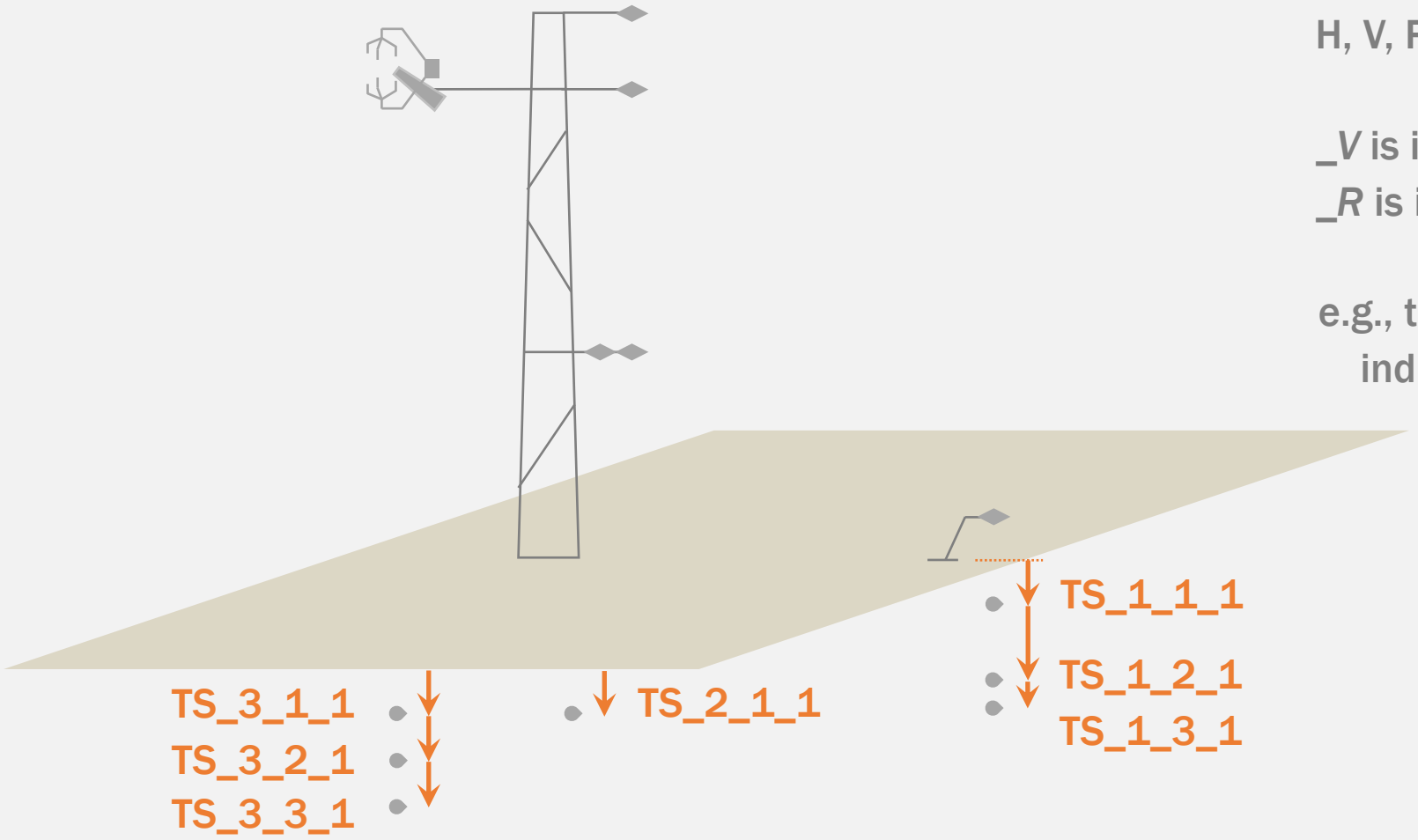


**Positional qualifier: *_H_V_R***

H, V, R are relative indices

*_V* is independent of other *_H*

*_R* is independent of other *_H_V*

e.g., the 3rd H position resets the V and R indices, even at different depths

# 2 FP Standard: Assigning Positional and Aggregation Qualifiers

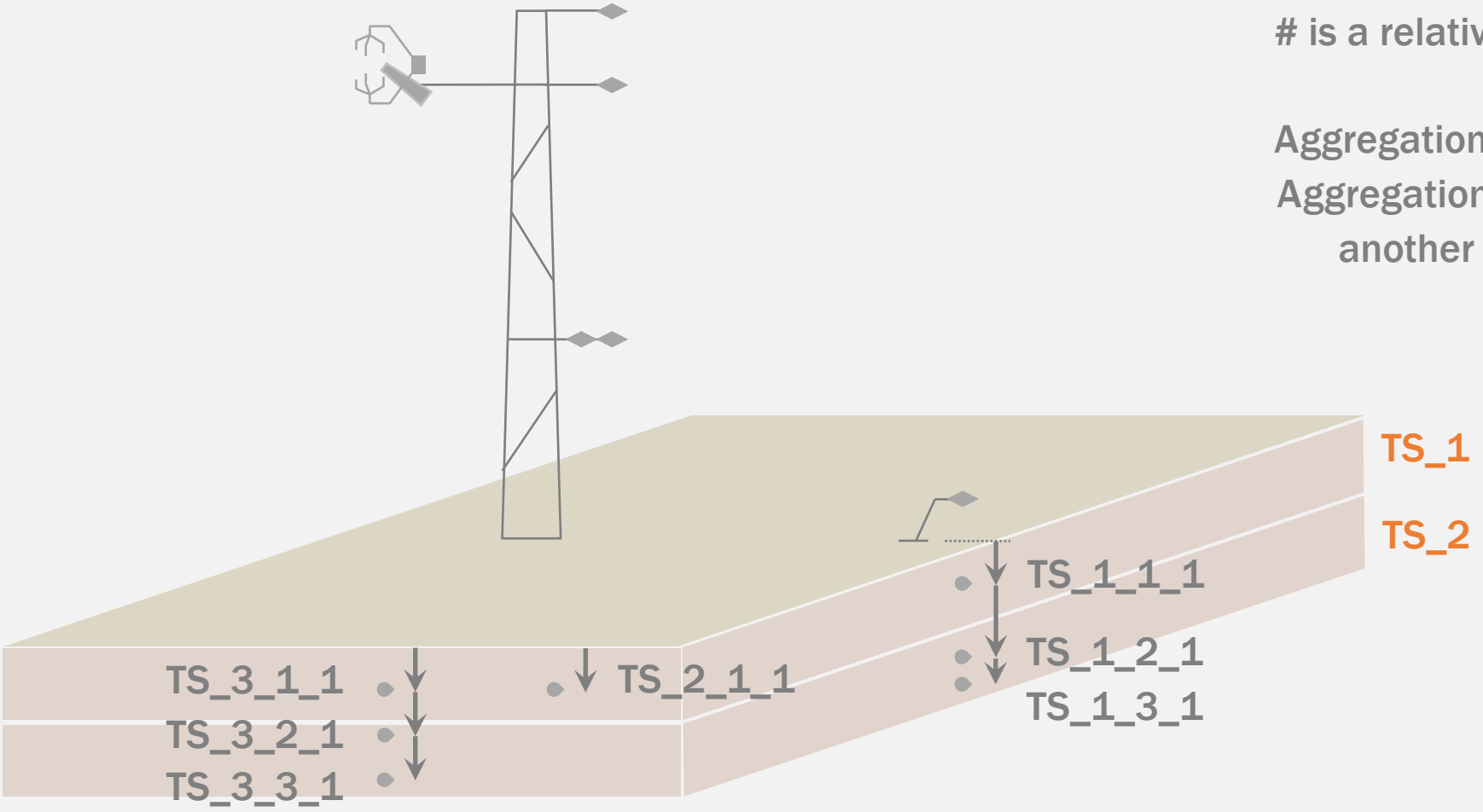


**Layer aggregation: _#**

# is a relative index

Aggregation can mean an average

Aggregation can mean filled by another sensor in the layer

## 3 Height / Instrument model are BADM (supporting information / data)

**Biological, Ancillary, Disturbance, and Metadata (BADM)**

https://ameriflux.lbl.gov/data/badm-data-templates

→ Site General Info (use online editor from site page once)
→ Disturbance
→ Variable Information (use online Variable information tool)
→ Instrument / Instrument Ops
→ Soil
→ VegCover

BADM becomes AmeriFlux BIF data product

During BADM rebuild: Measurement Height has height / model info

# 3 Get to Variable Information Tool from site page

http://ameriflux.lbl.gov/sites/siteinfo/<site_id>

Home | About | Community | Sites | Data | Tech | Year of Methane | Resources

Home / Sites / Siteinfo / US-VFP

## US-VFP: Virginia Coast Reserve Fowling Point

| Overview | Windroses | DOI | Data Use Log | Image Gallery | MODIS | Publications | BADM |
|---|---|---|---|---|---|---|---|

### BADM for This Site

Access the Biological, Ancillary, Disturbance and Metadata (BADM) information and data for this site.

BADM contain information for many uses, such as characterizing a site's vegetation and soil, describing disturbance history, and defining instrumentation for flux processing. They complement the flux/met data.

- Download BADM for this site*
- View Site General Info for this site (Overview tab)*
- Use Online Editor to update Site General Info (Site team only)
- Update information about submitted data (Variable Information tool).
- More BADM resources

# 3 Select your site (must be a listed as a site team member via BADM)

https://ameriflux.lbl.gov/sites/variable-information

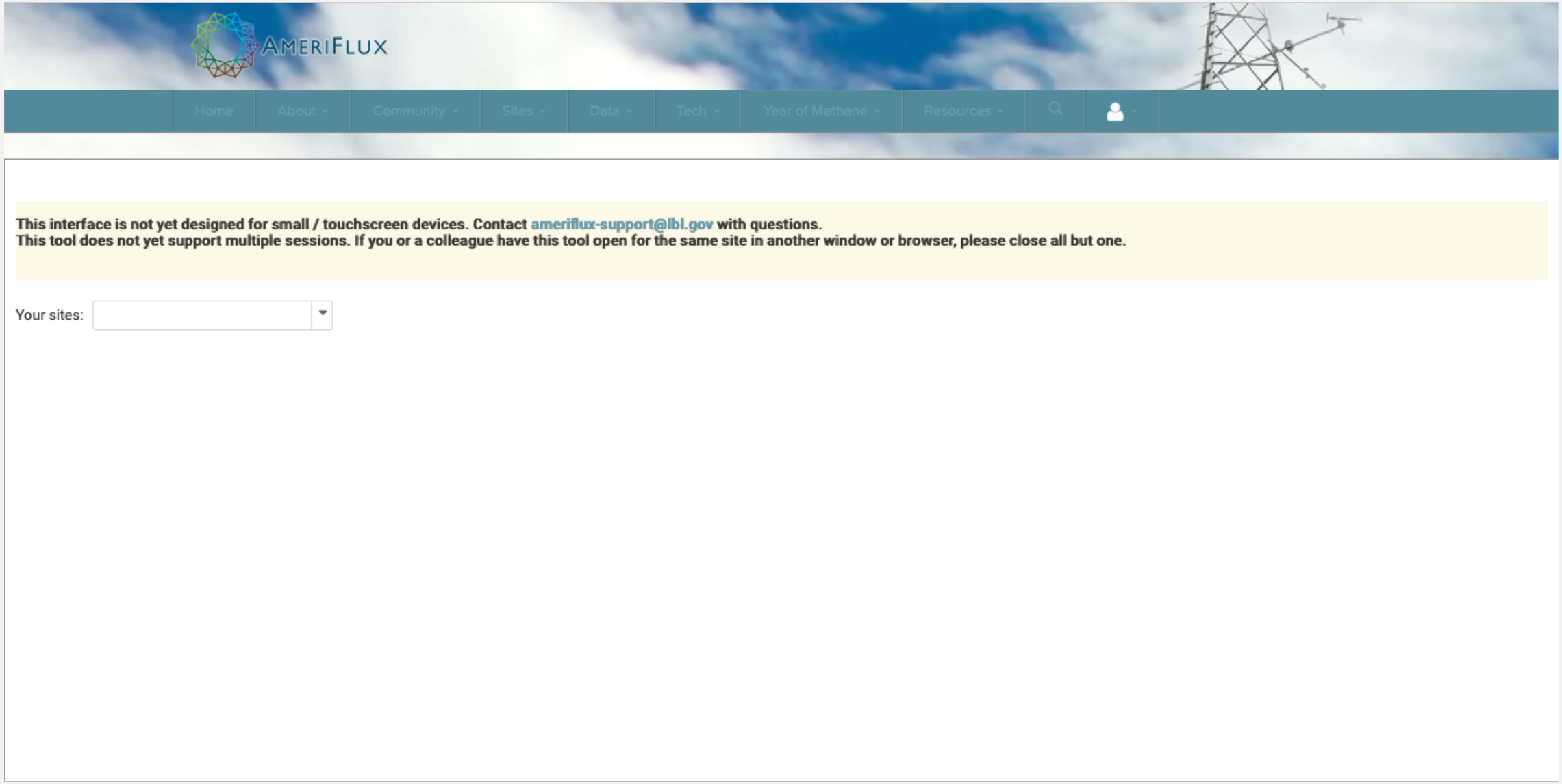

# 3 Read / Watch instructions: requirements differ

Your sites: **US-UMB**

## US-UMB: Variable Information

Please **watch** the five minute video for instructions.

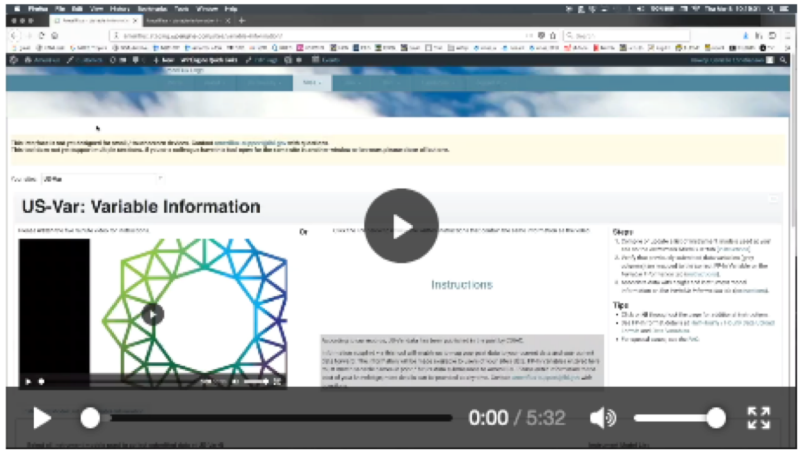


**Or** Click the link below to **review** the written instructions that contain the same information as the video:

Instructions

According to our records, US-UMB data have been published in the past by CDIAC.

Information supplied via this tool will enable us to map your past data to your current data and your current data forward. The information will be made available to users of your site's data. FP-In Variables entered here must match variable names in prior / future data submissions to AmeriFlux. Please enter information to the best of your knowledge; more details can be provided at any time. Contact ameriflux-support@lbl.gov with questions.

### Steps

1. Compile or update a list of instrument models used at your site on the *Instrument Model List* tab (instructions).
2. Verify that previously submitted data variables (gray columns) are mapped to the correct FP-In Variable on the *Variable Information* tab (instructions).
3. Associate data with height and instrument model information on the *Variable Information* tab (instructions).

### Tips

- Click on ? throughout the page for additional instructions.
- See FP-In format details at Half-Hourly / Hourly Data Upload Format and Data Variables.
- For special cases, see the FAQ.

Instrument Model List | Variable Information

**Select all instrument models used to collect submitted data at US-UMB ?**

- Gas Analyzer, Closed Path Fast Response (GA_CP)
- Gas Analyzer, Open Path Fast Response (GA_OP)

**Instrument Model List**

GA_CP-LI-COR LI-6252
GA_CP-LI-COR LI-6262
GA_CP-LI-COR LI-7000
SA-Campbell CSAT-3

# 3 Both: Create Instrument Model List

Your sites: **US-UMB**

## US-UMB: Variable Information

Instrument Model List | Variable Information

**Select all instrument models used to collect submitted data at US-UMB**

- Gas Analyzer, Closed Path Fast Response (GA_CP)
- Gas Analyzer, Open Path Fast Response (GA_OP)
- Gas Analyzer, Slow Response (GA_SR)
- Gas Analyzer, Open Path with Sonic Anemometer (GA_OP_SA)
- Gas Analyzer, Closed Path with Sonic Anemometer (GA_CP_SA)
- Gas Analyzer (GA)
- Sonic Anemometer (SA)
- Wind sensor (WIND)
- Atmospheric Pressure (PRES)
- Air Relative Humidity (RH)
- Temperature (TEMP)
- Radiation (RAD)
- Spectral/Optical (SPECT)
- Rain (RAIN)

**Instrument Model List**

GA_CP-LI-COR LI-6252
GA_CP-LI-COR LI-6262
GA_CP-LI-COR LI-7000
SA-Campbell CSAT-3
WIND-CupAn
PRES-Other: Vaisala capacitive pressure sensor
RH-Capac
RH-Other: Rotronic Hygromer IN-1

Save List

*After updating instrument model list, go to Variable Information tab to add associations with variables.*

Import instrument models from another site — Import

Historical Instrument Information

# 3 Both: Create Instrument Model List

Your sites: **US-UMB**

## US-UMB: Variable Information

Instrument Model List | Variable Information

**Select all instrument models used to collect submitted data at US-UMB**

Gas Analyzer, Closed Path Fast Response (GA_CP)

| | | | |
|---|---|---|---|
| GA_CP-Aerodyne | GA_CP-Campbell TGA100 | GA_CP-Campbell TGA200A | GA_CP-Campbell EC155 |
| GA_CP-LGR RMT-200 | GA_CP-LGR 911-0001 | GA_CP-LGR 911-0010 | GA_CP-LGR 911-0020 |
| GA_CP-LGR 913-0014 | GA_CP-LGR 913-0029 | GA_CP-LGR 913-1054 | GA_CP-LGR 914-0028 |
| [illegible] | GA_CP-LGR Other | GA_CP-LI-COR LI-6252 | GA_CP-LI-COR LI-6262 |
| GA_CP-LI-COR LI-7000 | GA_CP-LI-COR LI-7200 | GA_CP-LI-COR LI-7200RS | GA_CP-Picarro G1301-f |
| GA_CP-Picarro G2301-f | GA_CP-Picarro G2311-f | GA_CP-Picarro Other | GA_CP-Other |

Gas Analyzer, Closed Path, LI-COR LI-7000

Comment

Gas Analyzer, Open Path Fast Response (GA_OP)

Gas Analyzer, Slow Response (GA_SR)

Gas Analyzer, Open Path with Sonic Anemometer (GA_OP_SA)

Gas Analyzer, Closed Path with Sonic Anemometer (GA_CP_SA)

Gas Analyzer (GA)

**Instrument Model List**

GA_CP-LI-COR LI-6252
GA_CP-LI-COR LI-6262
GA_CP-LI-COR LI-7000
SA-Campbell CSAT-3
WIND-CupAn
PRES-Other: Vaisala capacitive pressure sensor
RH-Capac
RH-Other: Rotronic Hygromer IN-1

Save List

*After updating instrument model list, go to Variable Information tab to add associations with variables.*

Import instrument models from another site — Import

Historical Instrument Information

# 3 Both: Create Instrument Model List

Your sites: **US-UMB**

## US-UMB: Variable Information

Instrument Model List | Variable Information

**Select all instrument models used to collect submitted data at US-UMB**

- Air Relative Humidity (RH)
- Temperature (TEMP)
- Radiation (RAD)
- Spectral/Optical (SPECT)
- Rain (RAIN)
- Precipitation (PREC)
- Snowfall (SNOW)
- Soil Heat Flux (SOIL_H)
  - ☑ SOIL_H-Plate
  - ☐ SOIL_H-Plate_AUTO
  - ☐ SOIL_H-Other — *Comment*
- Soil Water Content (SWC)
- Water table depth (WTD)
- Multiple measurement (MULTI)

**Instrument Model List**

RAD-SW Pyran Class2
RAD-Other: Kipp and Zonen NR-lite
PREC-OpticGauge
PREC-TipBucGauge
SOIL_H-Plate
SWC-TDR
SWC-Other: Steven Hydra Probe Coaxial impedance dielectric relfectrometry

Save List

*After updating instrument model list, go to Variable Information tab to add associations with variables.*

Import instrument models from another site — Import

Historical Instrument Information

*No historical data*

## 3 Entering height /model

**1:1 match of submitted flux-met variables to FP-In Variable column**

**Enter height /model info, including changes**

For sites with historical data**:

→ Map FP-In Variable names to previously submitted data

→ Update pre-populated information

→ Add any new variables submitted

→ Customize the table columns

(** Historical data is data submitted before FP-In Standard)

# 3 Entering height /model: Variable Information tab

Your sites: US-UMB

## US-UMB: Variable Information

**Columns will be different for each site**
**Grey columns = historical data (no editing)**
**White columns = current info (edit these!!)**

Instrument Model List | Variable Information

Save

Status
- Reviewed (Saved)
- Updated (NOT Saved)
- Not yet addressed (Saved)
- To be deleted (to undo)

Show Historical Instruments

Customize Columns: 11 Columns Shown

+ New Variable

*Gray columns are data in older formats and cannot be edited. Hover over column for details. View only useful columns with Customize Columns at right.*

| Site Team Variable | Status | Reset | Delete | FP-In Variable | Reuse values from... | Height (meters) | Instrument Model | Start Date for Height / Instrument Model | Height / Instrument Model Change | Comment |
|---|---|---|---|---|---|---|---|---|---|---|
| *Not provided to CDIAC* | | | | H2O | | 46 | GA_CP-LI-COR LI-6252 | start of data | Add | |
| *Not provided to CDIAC* | | | | → H2O | | 48 | GA_CP-LI-COR LI-6252 | 20010509 | Add | changed ht |
| Rlong_in | | | | LW_IN | | 46 | *Unspecified* | start of data | Add | |
| Rlong_out | | | | LW_OUT | | 46 | *Unspecified* | start of data | Add | |
| NEE_gf | | | | NEE_F | | 46 | GA_CP-LI-COR LI-6252<br>SA-Campbell CSAT-3 | start of data | Add | |

# 3 Goal = 1:1 match between submitted flux-met data and FP-In Variable

Your sites: US-UMB

## US-UMB: Variable Information

Instrument Model List | Variable Information

Save

+ New Variable

*Gray columns are data in older formats and cannot be edited. Ho over column for de*

| Site Team Variable | Status | Reset | Delete | FP-In Variable | Reu valu from | | | | |
|---|---|---|---|---|---|---|---|---|---|
| *Not provided to CDIAC* | | | × | H2O | | | | | |
| *Not provided to CDIAC* | | | × | → H2O | | | | | |
| Rlong_in | | | × | LW_IN | | | | | |
| Rlong_out | | | × | LW_OUT | | 46 | *Unspecified* | start of data | Add |
| NEE_gf | | | × | NEE_F | | 46 | GA_CP-LI-COR LI-6252<br>SA-Campbell CSAT-3 | start of data | Add |

| TIMESTAMP_START | TIMESTAMP_END | CO2 | FC | USTAR | TA_1_1_1 | WD |
|---|---|---|---|---|---|---|
| 200401010000 | 200401010030 | -9999 | -9999 | -9999 | -9999 | - |
| 200401010030 | 200401010100 | -9999 | -9999 | -9999 | -9999 | - |
| 200401010100 | 200401010130 | 371.419 | 0.561 | 0.099 | -1.172 | 108 |
| 200401010130 | 200401010200 | 371.117 | 0.424 | 0.065 | -1.049 | 124 |
| 200401010200 | 200401010230 | -9999 | -9999 | -9999 | -1.109 | - |
| 200401010230 | 200401010300 | 372.87 | 0.106 | 0.054 | -2.228 | 8 |
| 200401010300 | 200401010330 | 373.339 | 0.406 | 0.066 | -2.525 | 24 |
| 200401010330 | 200401010400 | 373.661 | 1.225 | 0.013 | -2.287 | 24 |
| 200401010400 | 200401010430 | 374.326 | 0.847 | 0.029 | -2.483 | 42 |
| 200401010430 | 200401010500 | -9999 | -9999 | -9999 | -1.829 | - |
| 200401010500 | 200401010530 | 374.452 | 0.908 | 0.066 | -2.456 | 199 |
| 200401010530 | 200401010600 | -9999 | -9999 | -9999 | -2.668 | - |

# 3 Goal = 1:1 match between submitted flux-met data and FP-In Variable

Your sites: US-UMB

## US-UMB: Variab

Variable name for data included in submitted data file, or
Variable name to which older data should be mapped.

All variable names in this column must be included in a future / prior data file. An entry in this column indicates that the variable is proposed for publication.

Use FP-In variable name formats when possible. Non-standard variables can be provided but will not be published. Contact ameriflux-support@lbl.gov to request support for additional variables.

The full list of FP-In Variables are listed in the dropdown menu by clicking on the right button of a FP-In Variable cell after you click on the cell. Qualifiers can be added as needed.

See https://ameriflux.lbl.gov/half-hourly-hourly-data-upload-format/ and https://ameriflux.lbl.gov/data-variables/ for more details.

Instrument Model List | Variable Inform

Save

Status
- Reviewed (Saved)
- Updated (NOT Saved)
- Not yet addressed (Saved)
- To be deleted (undo)

Show Historical Instruments

Customize Columns: 11 Columns Shown

+ New Variable

*Gray columns are data in older formats an ... w only useful columns with Customize Columns at right.*

| Site Team Variable | Status | Reset | Delete | FP-In Variable | Reuse values from... | Height (meters) | Instrument Model | Start Date for Height / Instrument Model | Height / Instrument Model Change | Comment |
|---|---|---|---|---|---|---|---|---|---|---|
| LE | | | | LE | | 46 | GA_CP-LI-COR LI-6252<br>SA-Campbell CSAT-3 | start of data | Add | |
| LE | | | | → LE | | 48 | GA_CP-LI-COR LI-6252<br>SA-Campbell CSAT-3 | 20010509 | Add | |
| LE | | | | → LE | | 48 | GA_CP-LI-COR LI-7000<br>SA-Campbell CSAT-3 | 20050331 | Add | |
| NEE | | | | NEE | | 46 | GA_CP-LI-COR LI-6252 | start of data | Add | |

# 3 Enter height / model (sites with historical data are pre-populated)

Your sites: US-UMB

## US-UMB: Variable Information

**Height = positive, Depth = negative.**
**Instrument Model is a menu generated from the Instrument Model List tab.**

Instrument Model List | Variable Information

Save

Status
- Reviewed (Saved)
- Updated (NOT Saved)
- Not yet addressed (Saved)
- To be deleted (to undo)

Show Historical Instruments

Customize Columns: 11 Columns Shown

+ New Variable

*Gray columns are data in older formats and cannot be edited. Hover over column for details. View useful columns in Customize Columns at right.*

| Site Team Variable | Status | Reset | Delete | FP-In Variable | Reuse values from... | Height (meters) | Instrument Model | Start Date for Height / Instrument Model | Height / Instrument Model Change | Comment |
|---|---|---|---|---|---|---|---|---|---|---|
| *Not provided to CDIAC* | | | | H2O | | 46 | GA_CP-LI-COR LI-6252 | start of data | Add | |
| *Not provided to CDIAC* | | | | → H2O | | 48 | GA_CP-LI-COR LI-6252 | 20010509 | Add | changed ht |
| Rlong_in | | | | LW_IN | | 46 | *Unspecified* | start of data | Add | |
| Rlong_out | | | | LW_OUT | | 46 | *Unspecified* | start of data | Add | |
| NEE_gf | | | | NEE_F | | 46 | GA_CP-LI-COR LI-6252<br>SA-Campbell CSAT-3 | start of data | Add | |

# 3 Sites with historical: Map FP-In Variable to previously submitted data

Your sites: **US-UMB**

## US-UMB: Variable Information

Instrument Model List | Variable Information

Save

Status
- Reviewed (Saved)
- Updated (NOT Saved)
- Not yet addressed (Saved)
- To be deleted (undo)

Show Historical Instruments

Customize Columns: **13 Columns Shown**

+ New Variable

*Gray columns are data in older formats and cannot be edited. Hover over column for details. View only useful columns with Customize Columns at right.*

| Site Team Variable | CDIAC Description | Early-version BASE Variable | Status | Reset | Delete | FP-In Variable | Reuse values from... | Height (meters) | Instrument M |
|---|---|---|---|---|---|---|---|---|---|
| *Not provided to CDIAC* | *Not applicable* | *Not included* | | | | H2O | | 46 | GA_CP-LI-CO |
| *Not provided to CDIAC* | *Not applicable* | *Not included* | | | | → H2O | | 48 | GA_CP-LI-CO |
| Rlong_in | Rlong_in W/m2 at 46m | LW_IN | | | | LW_IN | | 46 | *Unspecified* |
| Rlong_out | Rlong_out W/m2 at 46m | LW_OUT | | | | LW_OUT | | 46 | *Unspecified* |
| NEE_gf | NEE_gf umol/m2/s | *Not included* | | | | NEE_F | | 46 | GA_CP-LI-CO<br>SA-Campbell |

# 3 Customize the table columns

Your sites: US-UMB

## US-UMB: Variable Information

Instrument Model List | Variable Information

Save

Status
- Reviewed (Saved)
- Updated (NOT Saved)
- Not yet addressed (Saved)
- To be deleted (to undo)

Show Historical Instruments

Customize Columns: 13 Columns Shown

- Site Team Variable
- CDIAC Variable
- L2 Variable
- Site Team Description
- CDIAC Description
- Early-version BASE Variable
- Status

+ New Variable

*Gray columns are data in older formats and cannot be edited. Hover over column for details. View only useful columns with Customize Columns at right.*

| Site Team Variable | CDIAC Description | Early-version BASE Variable | Status | Reset | Delete | FP-In Variabl | | | rument M |
|---|---|---|---|---|---|---|---|---|---|
| *Not provided to CDIAC* | *Not applicable* | *Not included* | | | | H2O | | | -LI-CO |
| *Not provided to CDIAC* | *Not applicable* | *Not included* | | | | → H2O | | | -LI-CO |
| Rlong_in | Rlong_in W/m2 at 46m | LW_IN | | | | LW_IN | | | *cified* |
| Rlong_out | Rlong_out W/m2 at 46m | LW_OUT | | | | LW_OUT | | 46 | *Unspecified* |
| NEE_gf | NEE_gf umol/m2/s | *Not included* | | | | NEE_F | | 46 | GA_CP-LI-CO<br>SA-Campbell |

# 3 Adding a change in height / model

This interface is not yet designed for small / touchscreen devices. Contact ameriflux-support@lbl.gov with questions.
This tool does not yet support multiple sessions. If you or a colleague have this tool open for the same site in another window or browser, please close all but one.

Your sites: US-UMB

## US-UMB: Variable Information

Instrument Model List | Variable Information

Save

Status
- Reviewed (Saved)
- Updated (NOT Saved)
- Not yet addressed (Saved)
- To be deleted (to undo)

Show Historical Instruments

Customize Columns: 11 Columns Shown

+ New Variable

*Gray columns are data in older formats and cannot be edited. Hover over column for details. View only useful columns with Customize Columns at right.*

| Site Team Variable | Status | Reset | Delete | FP-In Variable | Reuse values from... | Height (meters) | Instrument Model | Start Date for Height / Instrument Model | Height / Instrument Model Change | Comment |
|---|---|---|---|---|---|---|---|---|---|---|
| LE | | | | LE | | 46 | GA_CP-LI-COR LI-6252<br>SA-Campbell CSAT-3 | start of data | Add | |
| LE | | | | → LE | | 48 | GA_CP-LI-COR LI-6252<br>SA-Campbell CSAT-3 | 20010509 | Add | |
| LE | | | | → LE | | 48 | GA_CP-LI-COR LI-7000<br>SA-Campbell CSAT-3 | 20050331 | Add | |
| NEE | | | | NEE | | 46 | GA_CP-LI-COR LI-6252 | start of data | Add | |

# 3 Adding a change in height / model

This interface is not yet designed for small / touchscreen devices. Contact ameriflux-support@lbl.gov with questions.
This tool does not yet support multiple sessions. If you or a colleague have this tool open for the same site in another window or browser, please close all but one.

Your sites: US-UMB

US-UMB: Variable Inform

Instrument Model List | Variable Information

Save

+ New Variable

Gray columns are data in older formats and cannot be edited. Hov

Status
- Reviewed (Saved)
- Updated (NOT Saved)
- Not yet addressed (Saved)
- To be deleted (↺ to undo)

l Instruments

ns: 11 Columns Shown

| Site Team Variable | Status | Reset | Delete | F | | | | e for rument l | Height / Instrument Model Change | Comment |
|---|---|---|---|---|---|---|---|---|---|---|
| LE | | | | LE | | 46 | GA_CP-LI-COR LI-6252<br>SA-Campbell CSAT-3 | start of data | Add | |
| LE | | | | → LE | | 48 | GA_CP-LI-COR LI-6252<br>SA-Campbell CSAT-3 | 20010509 | Add | |
| LE | | | | → LE | | 48 | GA_CP-LI-COR LI-7000<br>SA-Campbell CSAT-3 | 20050331 | Add | |
| NEE | | | | NEE | | 46 | GA_CP-LI-COR LI-6252 | start of data | Add | |

## Add Segment to Data Record

Enter information on the change in Height or Instrument Model.

After clicking Enter, a new row will be added to the table for the FP-In Variable. The data segment will be indicated by → before the FP-In Variable.

Height

Instrument Model: *Unspecified*

Instrument Model: *Unspecified*

Start Date (required): *YYYYMMDD, YYYYMM, YYYY*

Comment

Reuse | Enter

# 3 Both: Reuse height / model values already entered

Instrument Model List | Variable Information

Save

Status
- Reviewed (Saved)
- Updated (NOT Saved)
- Not yet addressed (Saved)
- To be deleted (to undo)

Show Historical Instruments

Customize Columns: 11 Columns Shown

+ New Variable

*Gray columns are data in older formats and cannot be edited. Hover over column ... ils. View only useful columns with Customize Columns at right.*

| Site Team Variable | Status | Reset | Delete | FP-In Variable | Reuse values from... | Height (meters) | Instrument Model | Start Date for Height / Instrument Model | Height / Instrument Model Change | Comment |
|---|---|---|---|---|---|---|---|---|---|---|
| FC_gf | | | | FC_F | | 46 | GA_CP-LI-COR LI-6252<br>SA-Campbell CSAT-3 | start of data | Add | |
| FC_gf | | | | → FC_F | | 48 | GA_CP-LI-COR LI-6252<br>SA-Campbell CSAT-3 | 20010509 | Add | |
| FC_gf | | | | → FC_F | | 48 | GA_CP-LI-COR LI-7000<br>SA-Campbell CSAT-3 | 20050331 | Add | |
| GPP | | | | GPP | | 46 | GA_CP-LI-COR LI-6252<br>SA-Campbell CSAT-3 | start of data | Add | |
| GPP | | | | → GPP | | 48 | GA_CP-LI-COR LI-6252<br>SA-Campbell CSAT-3 | 20010509 | Add | |
| GPP | | | | → GPP | | 48 | GA_CP-LI-COR LI-7000<br>SA-Campbell CSAT-3 | 20050331 | Add | |
| GPP_gf | | | | GPP_F | | 46 | GA_CP-LI-COR LI-6252<br>SA-Campbell CSAT-3 | start of data | Add | |
| [illegible] | | | | [illegible] | | [illegible] | GA_CP-LI-COR LI-6252 | [illegible] | [illegible] | |

Save

# 3 Both: Reuse height / model values already entered

Instrument Model List | Variable Information

Save

Status
- Reviewed (Saved)
- Updated (NOT Saved)
- Not yet addressed (Saved)
- To be deleted (↺ to undo)

Show Historical Instruments

Customize Columns: 11 Columns Shown

+ New Variable

*Gray columns are data in older formats and cannot be edited. Hover over column ? for details. View only useful columns with Customize Columns at right.*

| Site Team Variable | Status | Reset | | | | | | | Comment |
|---|---|---|---|---|---|---|---|---|---|
| FC_gf | | | | | | | | d | |
| FC_gf | | | | | | | | d | |
| FC_gf | | | | | | | | d | |
| GPP | | | | | | | | d | |
| GPP | | | | | | | | d | |
| GPP | | × | → GPP | | 48 | GA_CP-LI-COR LI-7000<br>SA-Campbell CSAT-3 | 20050331 | Add | |
| GPP_gf | | × | GPP_F | | 46 | GA_CP-LI-COR LI-6252<br>SA-Campbell CSAT-3 | start of data | Add | |
| | | | | | | GA_CP-LI-COR LI-6252 | | | |

Save

## Reuse Existing Values

Click on row to add values to the current FP-In Variable.

| Height | Instrument Model | Start Date | Comment |
|---|---|---|---|
| 48 | GA_CP-LI-COR LI-6252 | 20010509 | Change ht of intake |
| 48 | GA_CP-LI-COR LI-6252<br>SA-Campbell CSAT-3 | 20010509 | changed ht of both instruments |
| 48 | GA_CP-LI-COR LI-6252<br>SA-Campbell CSAT-3 | 20010509 | |
| 48 | GA_CP-LI-COR LI-7000<br>SA-Campbell CSAT-3 | 20050331 | |
| 46 | GA_CP-LI-COR LI-6252<br>SA-Campbell CSAT-3 | | |
| 46 | SA-Campbell CSAT-3 | | |

# 3 Click Warnings / Errors to see additional information

Instrument Model List | Variable Information

Save

Status
- Reviewed (Saved)
- Updated (NOT Saved)
- Not yet addressed (Saved)
- To be deleted (to undo)

Show Historical Instruments

Customize Columns: 11 Columns Shown

+ New Variable

*Gray columns are data in older formats and cannot be edited. Hover over column for details. View only useful columns with Customize Columns at right.*

| Site Team Variable | Status | Reset | Delete | FP-In Variable | Reuse values from... | Height (meters) | Instrument Model | Start Date for Height / Instrument Model | Height / Instrument Model Change | Comment |
|---|---|---|---|---|---|---|---|---|---|---|
| SWC_150mm | | | | SWC_1_2_1 | | -0.15 | *Unspecified* | start of data | Add | |
| SWC | | | | SWC_1_3_1 | | | *Unspecified* | start of data | Add | |
| *Not provided to CDIAC* | | | | SWC_1_3_1 | | -0.15 | **SWC-TDR** | start of data | Add | Campbell SCI CS-615. Integrated fron |
| SWC_300mm | | | | SWC_1_4_1 | | -0.3 | *Unspecified* | start of data | Add | |
| SWC_1m | | | | SWC_1_6_1 | | -1 | *Unspecified* | start of data | Add | |

# 3 Status indicators (single session only)

Instrument Model List | Variable Information

Save

Status
- Reviewed (Saved)
- Updated (NOT Saved)
- Not yet addressed (Saved)
- To be deleted (to undo)

Show Historical Instruments

Customize Columns: 11 Columns Shown

+ New Variable

*Gray columns are data in older formats and cannot be edited. Hover over column for details. View only useful columns with Customize Columns at right.*

| Site Team Variable | Status | Reset | Delete | FP-In Variable | Reuse values from... | Height (meters) | Instrument Model | Start Date for Height / Instrument Model | Height / Instrument Model Change | Comment |
|---|---|---|---|---|---|---|---|---|---|---|
| SWC_150mm | | | | SWC_1_2_1 | | -0.15 | *Unspecified* | start of data | Add | |
| SWC | | | | SWC_1_3_1 | | | *Unspecified* | start of data | Add | |
| *Not provided to CDIAC* | | | | SWC_1_3_1 | | -0.15 | **SWC-TDR** | start of data | Add | Campbell SCI CS-615. Integrated fron |
| SWC_300mm | | | | SWC_1_4_1 | | -0.3 | *Unspecified* | start of data | Add | |
| SWC_1m | | | | SWC_1_6_1 | | -1 | *Unspecified* | start of data | Add | |

# 3 Save your work!

Instrument Model List | Variable Information

Save

Status
- Reviewed (Saved)
- Updated (NOT Saved)
- Not yet addressed (Saved)
- To be deleted (undo)

Show Historical Instruments

Customize Columns: 11 Columns Shown

+ New Variable

*Gray columns are data in older formats and cannot be edited. Hover over column for details. View only useful columns with Customize Columns at right.*

| Site Team Variable | Status | Reset | Delete | FP-In Variable | Reuse values from... | Height (meters) | Instrument Model | Start Date for Height / Instrument Model | Height / Instrument Model Change | Comment |
|---|---|---|---|---|---|---|---|---|---|---|
| SWC_150mm | | | | SWC_1_2_1 | | -0.15 | *Unspecified* | start of data | Add | |
| SWC | | | | SWC_1_3_1 | | | *Unspecified* | start of data | Add | |
| *Not provided to CDIAC* | | | | SWC_1_3_1 | | -0.15 | **SWC-TDR** | start of data | Add | Campbell SCI CS-615. Integrated from |
| SWC_300mm | | | | SWC_1_4_1 | | -0.3 | *Unspecified* | start of data | Add | |
| SWC_1m | | | | SWC_1_6_1 | | -1 | *Unspecified* | start of data | Add | |
| SWC_2m | | | | SWC_1_7_1 | | -2 | *Unspecified* | start of data | Add | |
| Rg | | | | SW_IN | | 46 | **RAD-Other: Kipp and Zo** | start of data | Add | |
| Rg_out | | | | SW_OUT | | 46 | **RAD-Other: Kipp and Zo** | start of data | Add | |
| TA | | | | TA | | 46 | **TEMP-ElectResis** | start of data | Add | |
| TA_gf | | | | TA_F | | 46 | **RH-Other: Rotronic Hyg** | start of data | Add | |
| TS_3m | | | | TS_1_11_1 | | -3 | *Unspecified* | start of data | Add | |
| TS_50mm | | | | TS_1_2_1 | | -0.05 | **SWC-Other: Steven Hyd** | start of data | Add | |

Save

# 3 BADM Instrument and Instrument Ops

https://ameriflux.lbl.gov/data/badm-data-templates/

**Height / Model information can be reported on these templates, but with no mapping to historically submitted data.**

Processing of BADM Inst / Inst Ops templates is still on hold for the BADM rebuild.

Synthesizing the sensor-centric approach in the Inst / Inst Ops templates with the variable-centric approach of the Var Info tool.

# 4 Check your information in the Measurement Height product

https://ameriflux.lbl.gov/data/measurement-height/

## Measurement Height

**Measurement Height** contains height/depth and instrument model information for AmeriFlux BASE data products.* This information is updated approximately once a month, in conjunction with new BASE releases.

Measurement Height is a temporary data product be
upgraded. The downloaded csv file contains informa
Site teams can update their Measurement Height inf

Download BASE Measurement Height

***Safari and Chrome users:*** *To download the file, con*
*Linked File As" or "Save Link As", and specify a dest*

**Measurement Height contains the following inform**

| Item | Description |
|---|---|
| Site_ID | Site identifier. |
| Variable | Variable name of the data included in the BASE file. |
| Start_Date | Date when the information first applies. No value means the information begins at the start of the site's full data record. |
| Height | Distance from the ground surface in meters. Positive values are heights, and negative values are depths. |
| Instrument_Model | Instrument model used to collect the data variable. These values are from the predefined BADM Instrument list for instrument model types. See LIST(Vocabulary) tab in the BADM |

BASE_MeasurementHeight_20190614

Home Insert Page Layout Formulas Data Review View

A2533 | US-Ha1

| | A | B | C | D | E | F | G | H |
|---|---|---|---|---|---|---|---|---|
| 1 | Site_ID | Variable | Start_Date | Height | Instrument_Model | Instrument_Model2 | Comment | BASE_Version |
| 2512 | US-Ha1 | H | | 29 | SA-ATI SATI K Style | | | 11-5 |
| 2513 | US-Ha1 | H2O | | 29 | GA_CP-LI-COR LI-6262 | | Licor CO2/H2O sensor | 11-5 |
| 2514 | US-Ha1 | LE | | 29 | SA-ATI SATI K Style | GA_CP-LI-COR LI-6262 | | 11-5 |
| 2515 | US-Ha1 | NEE_PI | | 29 | SA-ATI SATI K Style | GA_CP-LI-COR LI-6262 | | 11-5 |
| 2516 | US-Ha1 | NEE_PI_F | | 29 | GA_CP-LI-COR LI-6262 | SA-ATI SATI K Style | | 11-5 |
| 2517 | US-Ha1 | O3 | | | GA-Other | | | 11-5 |
| 2518 | US-Ha1 | PPFD_IN_1_1_1 | | 29 | RAD-PAR Quantum | | | 11-5 |
| 2519 | US-Ha1 | PPFD_IN_2_1_1 | 20120422 | 29 | RAD-PAR Quantum | | | 11-5 |
| 2520 | US-Ha1 | PPFD_IN_1_2_1 | | 12.7 | RAD-PAR Quantum | | | 11-5 |
| 2521 | US-Ha1 | PPFD_IN_PI_F_1_1_1 | | 29 | RAD-PAR Quantum | | | 11-5 |
| 2522 | US-Ha1 | PPFD_DIF | 20120422 | 29 | RAD-PAR Quantum | | | 11-5 |
| 2523 | US-Ha1 | P | | | RAIN-TipBucGauge | | | 11-5 |

# Contact us at ameriflux-support@lbl.gov

All questions welcome.

We appreciate your feedback!

AMERIFLUX MANAGEMENT PROJECT

BERKELEY LAB
Lawrence Berkeley National Laboratory

Terrestrial Ecosystem SCIENCE

U.S. DEPARTMENT OF ENERGY | Office of Science

# Collecting / Submitting height and instrument information

**Questions? Comments?**
**Contact us at ameriflux-support@lbl.gov**

1. Measure height (+) / depth (-) of instruments from local surface
2. Assign / Match variable positional qualifiers to instruments
3. Enter height & instrument model via online Variable Information Tool
4. Confirm via Measurement Height temporary data product

AMERIFLUX MANAGEMENT PROJECT

BERKELEY LAB
Lawrence Berkeley National Laboratory

Terrestrial Ecosystem SCIENCE

U.S. DEPARTMENT OF ENERGY | Office of Science

# 1 FP Standard: Tips for assigning Positional and Aggregation Qualifiers

Positional qualifier: *_H_V_R*

H, V, R are relative indices

*_V* is independent of other *_H*
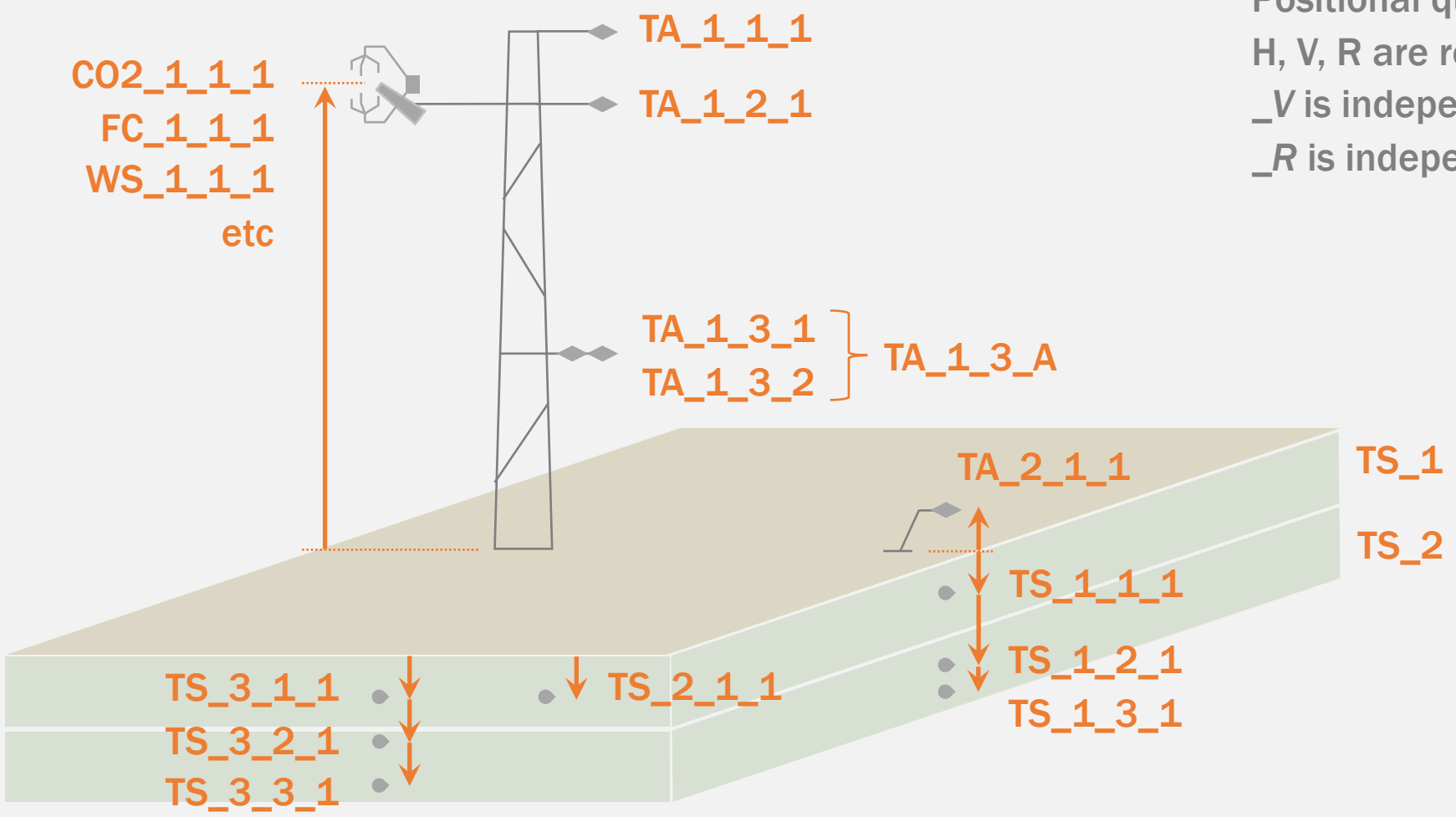
*_R* is independent of other *_H_V*