AmeriFlux
MANAGEMENT PROJECT

AmeriFlux Data Submission 101

AmeriFlux Data Team: Deb Agarwal, Danielle Svehla Christianson, **Housen Chu**, You-Wei Cheah, Fianna O'Brien, Gilberto Pastorello, Rachel Hollowgrass, Marty Humphrey,

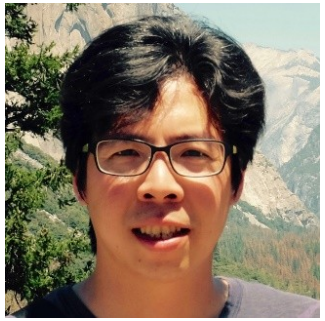

Former Data Team: Norm Beekwilder, Makayla Shepherd

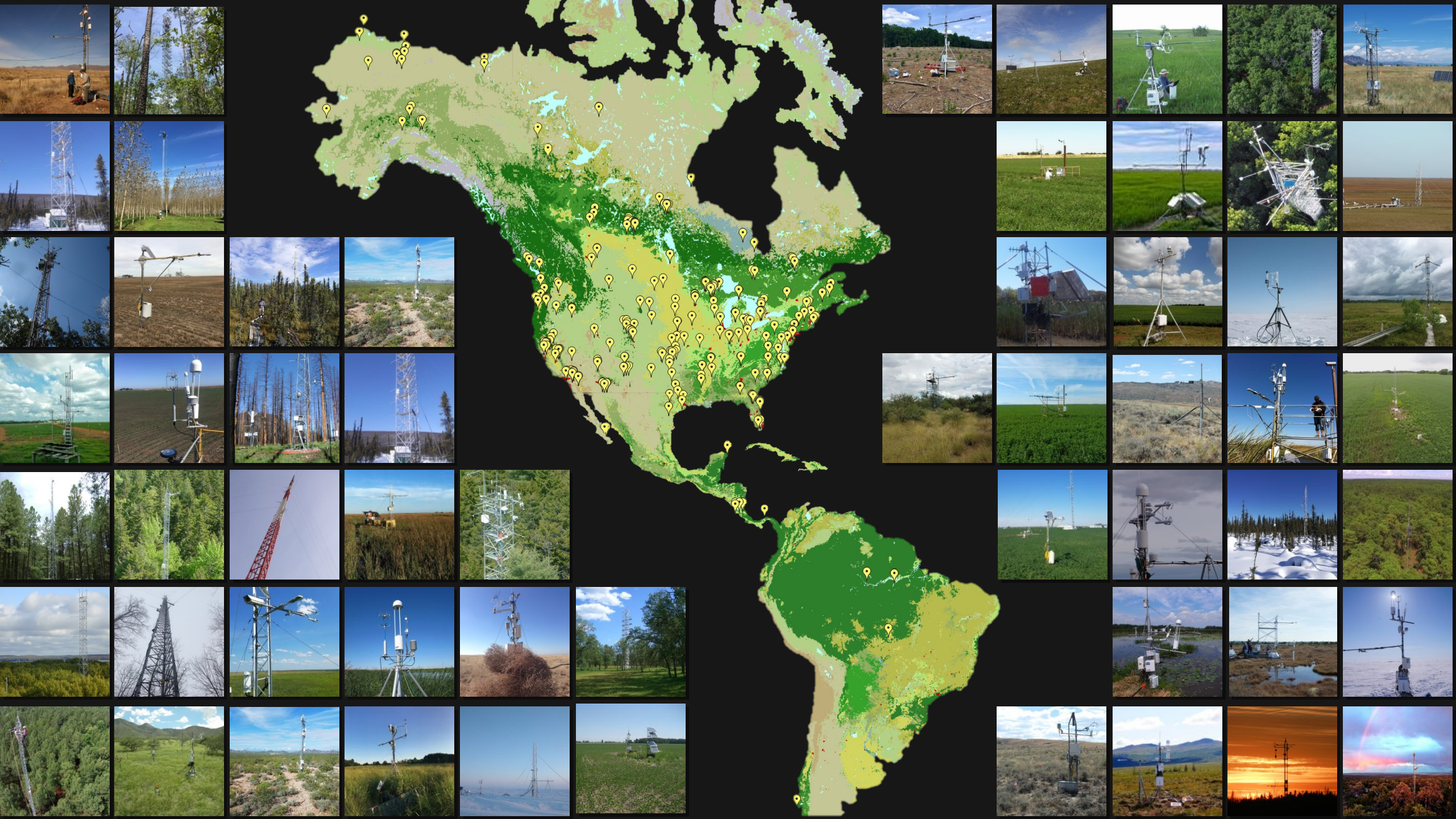

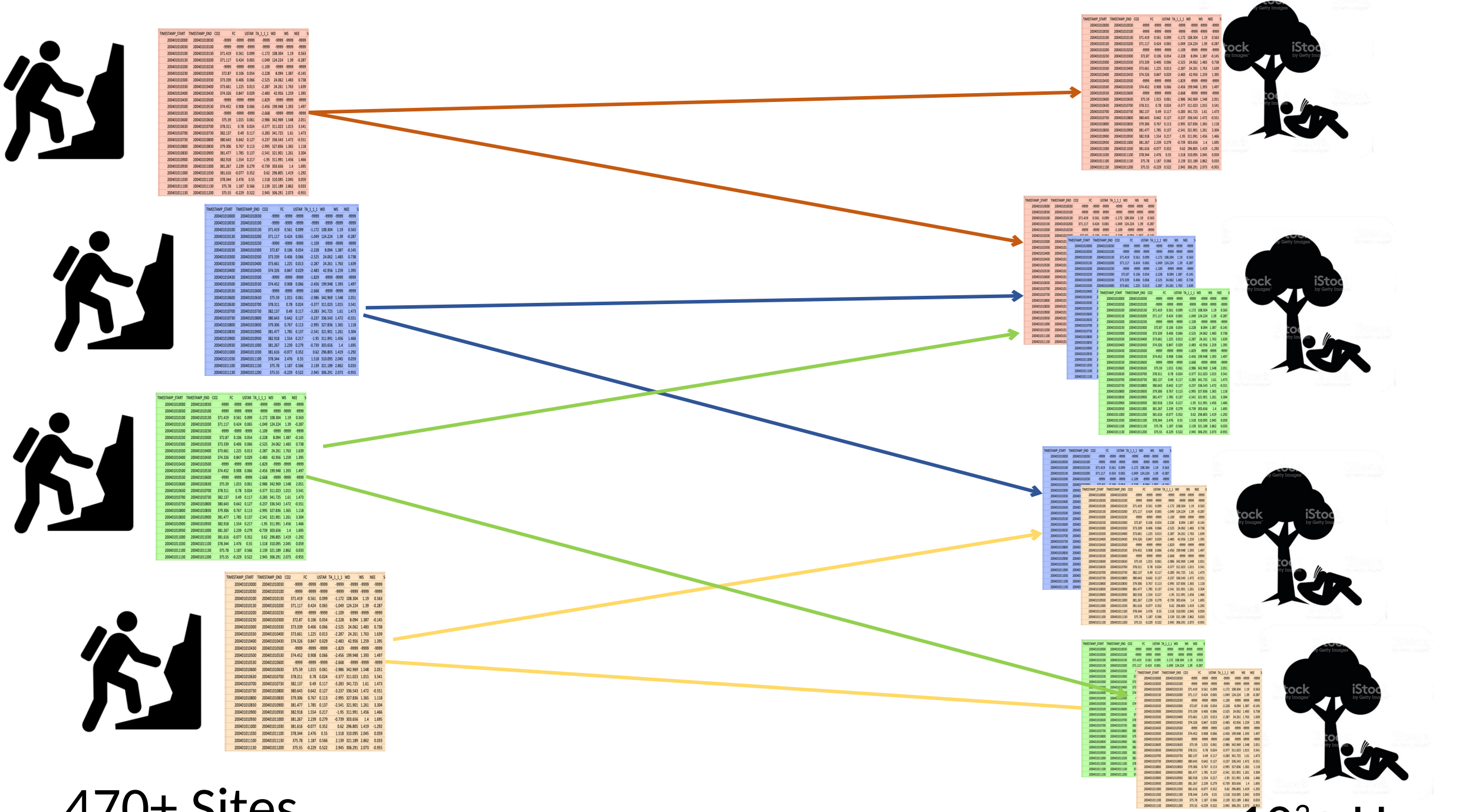
470+ Sites
10^3+ Users

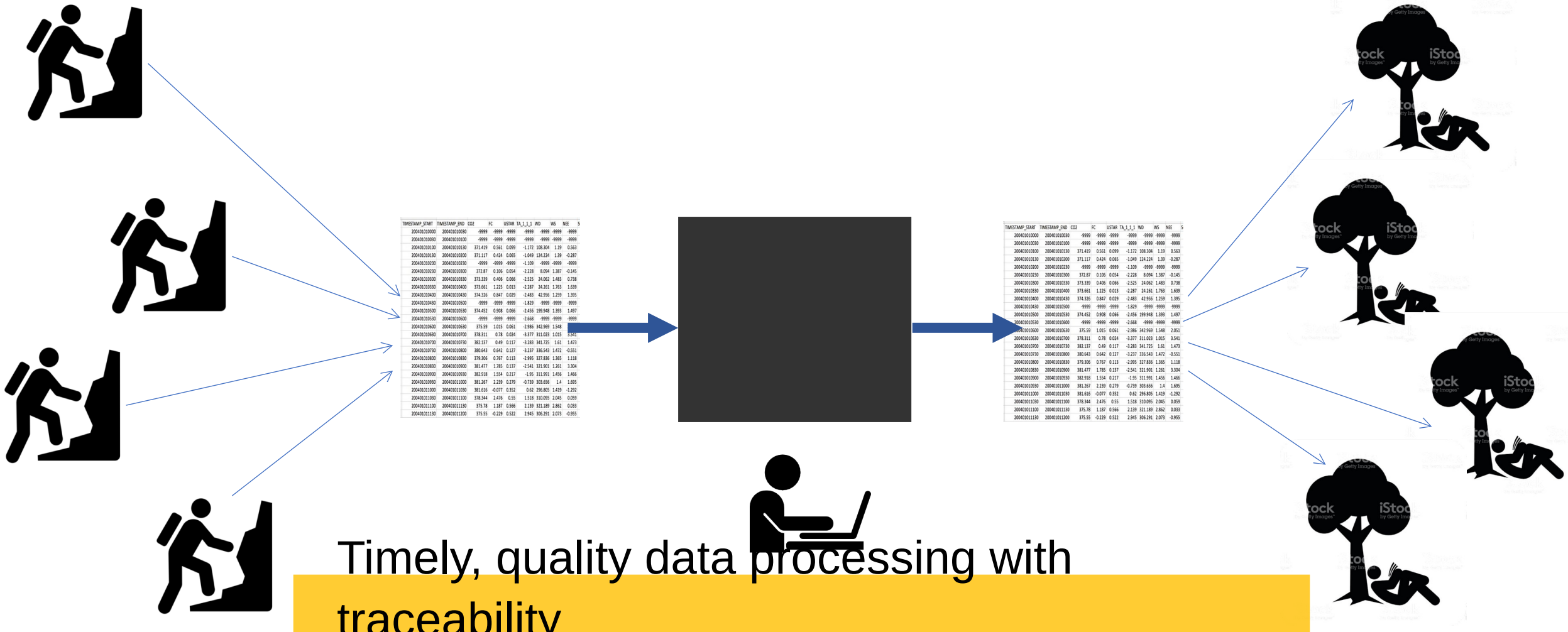

TIMESTAMP_START	TIMESTAMP_END	CO2	FC	USTAR	TA_1_1_1	WD	WS	NEE	S
200401010000	200401010030	-9999	-9999	-9999	-9999	-9999	-9999	-9999	
200401010030	200401010100	-9999	-9999	-9999	-9999	-9999	-9999	-9999	
200401010100	200401010130	371.419	0.561	0.099	-1.172	108.304	1.19	0.563	
200401010130	200401010200	371.117	0.424	0.065	-1.049	124.224	1.39	-0.287	
200401010200	200401010230	-9999	-9999	-9999	-1.109	-9999	-9999	-9999	
200401010230	200401010300	372.87	0.106	0.054	-2.228	8.094	1.387	-0.145	
200401010300	200401010330	373.339	0.406	0.066	-2.525	24.062	1.483	0.738	
200401010330	200401010400	373.661	1.225	0.013	-2.287	24.261	1.763	1.639	
200401010400	200401010430	374.326	0.847	0.029	-2.483	42.956	1.259	1.395	
200401010430	200401010500	-9999	-9999	-9999	-1.829	-9999	-9999	-9999	
200401010500	200401010530	374.452	0.908	0.066	-2.456	199.948	1.393	1.497	
200401010530	200401010600	-9999	-9999	-9999	-2.668	-9999	-9999	-9999	
200401010600	200401010630	375.59	1.015	0.061	-2.986	342.969	1.548		
200401010630	200401010700	378.311	0.78	0.024	-3.377	311.023	1.015	3.541	
200401010700	200401010730	382.137	0.49	0.117	-3.283	341.725	1.61	1.473	
200401010730	200401010800	380.643	0.642	0.127	-3.237	336.543	1.472	-0.551	
200401010800	200401010830	379.306	0.767	0.113	-2.995	327.836	1.365	1.118	
200401010830	200401010900	381.477	1.785	0.137	-2.541	321.901	1.261	3.304	
200401010900	200401010930	382.918	1.554	0.217	-1.95	311.991	1.456	1.466	
200401010930	200401011000	381.267	2.239	0.279	-0.739	303.656	1.4	1.695	
200401011000	200401011030	381.616	-0.077	0.352	0.62	296.805	1.419	-1.292	
200401011030	200401011100	378.344	2.476	0.55	1.518	310.095	2.045	0.059	
200401011100	200401011130	375.78	1.187	0.566	2.139	321.189	2.862	0.033	
200401011130	200401011200	375.55	-0.229	0.522	2.945	306.291	2.073	-0.955	

Timely, quality data processing with traceability

..... with minimal manual effort

FP Standard (Flux-Processing)

Developed by AmeriFlux & global partners

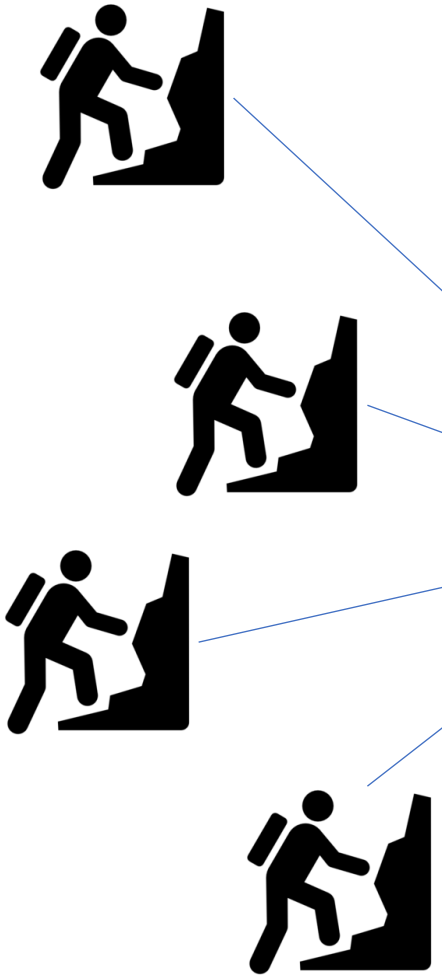

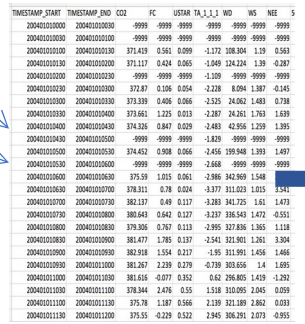

TIMESTAMP_START	TIMESTAMP_END	CO2	FC	USTAR	TA_1_1_1	WD	WS	NEE	S
200401010000	200401010030	-9999	-9999	-9999	-9999	-9999	-9999	-9999	
200401010030	200401010100	-9999	-9999	-9999	-9999	-9999	-9999	-9999	
200401010100	200401010130	371.419	0.561	0.099	-1.172	108.304	1.19	0.563	
200401010130	200401010200	371.117	0.424	0.065	-1.049	124.224	1.39	-0.287	
200401010200	200401010230	-9999	-9999	-9999	-1.109	-9999	-9999	-9999	
200401010230	200401010300	372.87	0.106	0.054	-2.228	8.094	1.387	-0.145	
200401010300	200401010330	373.339	0.406	0.066	-2.525	24.062	1.483	0.738	
200401010330	200401010400	373.661	1.225	0.013	-2.287	24.261	1.763	1.639	
200401010400	200401010430	374.326	0.847	0.029	-2.483	42.956	1.259	1.395	
200401010430	200401010500	-9999	-9999	-9999	-1.829	-9999	-9999	-9999	
200401010500	200401010530	374.452	0.908	0.066	-2.456	199.948	1.393	1.497	
200401010530	200401010600	-9999	-9999	-9999	-2.668	-9999	-9999	-9999	
200401010600	200401010630	375.59	1.015	0.061	-2.986	342.969	1.548	2.051	
200401010630	200401010700	378.311	0.78	0.024	-3.377	311.023	1.015	3.541	
200401010700	200401010730	382.137	0.49	0.117	-3.283	341.725	1.61	1.473	
200401010730	200401010800	380.643	0.642	0.127	-3.237	336.543	1.472	-0.551	
200401010800	200401010830	379.306	0.767	0.113	-2.995	327.836	1.365	1.118	
200401010830	200401010900	381.477	1.785	0.137	-2.541	321.901	1.261	3.304	
200401010900	200401010930	382.918	1.554	0.217	-1.95	311.991	1.456	1.466	
200401010930	200401011000	381.267	2.239	0.279	-0.739	303.656	1.4	1.695	
200401011000	200401011030	381.616	-0.077	0.352	0.62	296.805	1.419	-1.292	
200401011030	200401011100	378.344	2.476	0.55	1.518	310.095	2.045	0.059	
200401011100	200401011130	375.78	1.187	0.566	2.139	321.189	2.862	0.033	
200401011130	200401011200	375.55	-0.229	0.522	2.945	306.291	2.073	-0.955	

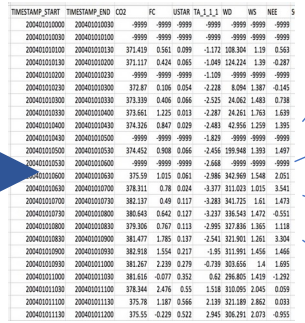

TIMESTAMP_START	TIMESTAMP_END	CO2	FC	USTAR	TA_1_1_1	WD	WS	NEE	S
200401010000	200401010030	-9999	-9999	-9999	-9999	-9999	-9999	-9999	
200401010030	200401010100	-9999	-9999	-9999	-9999	-9999	-9999	-9999	
200401010100	200401010130	371.419	0.561	0.099	-1.172	108.304	1.19	0.563	
200401010130	200401010200	371.117	0.424	0.065	-1.049	124.224	1.39	-0.287	
200401010200	200401010230	-9999	-9999	-9999	-1.109	-9999	-9999	-9999	
200401010230	200401010300	372.87	0.106	0.054	-2.228	8.094	1.387	-0.145	
200401010300	200401010330	373.339	0.406	0.066	-2.525	24.062	1.483	0.738	
200401010330	200401010400	373.661	1.225	0.013	-2.287	24.261	1.763	1.639	
200401010400	200401010430	374.326	0.847	0.029	-2.483	42.956	1.259	1.395	
200401010430	200401010500	-9999	-9999	-9999	-1.829	-9999	-9999	-9999	
200401010500	200401010530	374.452	0.908	0.066	-2.456	199.948	1.393	1.497	
200401010530	200401010600	-9999	-9999	-9999	-2.668	-9999	-9999	-9999	
200401010600	200401010630	375.59	1.015	0.061	-2.986	342.969	1.548	2.051	
200401010630	200401010700	378.311	0.78	0.024	-3.377	311.023	1.015	3.541	
200401010700	200401010730	382.137	0.49	0.117	-3.283	341.725	1.61	1.473	
200401010730	200401010800	380.643	0.642	0.127	-3.237	336.543	1.472	-0.551	
200401010800	200401010830	379.306	0.767	0.113	-2.995	327.836	1.365	1.118	
200401010830	200401010900	381.477	1.785	0.137	-2.541	321.901	1.261	3.304	
200401010900	200401010930	382.918	1.554	0.217	-1.95	311.991	1.456	1.466	
200401010930	200401011000	381.267	2.239	0.279	-0.739	303.656	1.4	1.695	
200401011000	200401011030	381.616	-0.077	0.352	0.62	296.805	1.419	-1.292	
200401011030	200401011100	378.344	2.476	0.55	1.518	310.095	2.045	0.059	
200401011100	200401011130	375.78	1.187	0.566	2.139	321.189	2.862	0.033	
200401011130	200401011200	375.55	-0.229	0.522	2.945	306.291	2.073	-0.955	

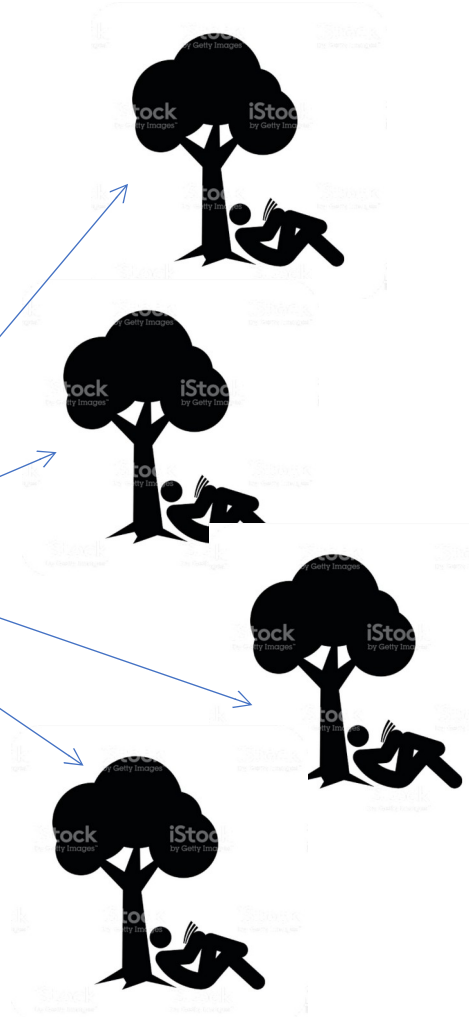

Enable synthesis across sites and methods

- Standardization of file format, time convention, variable name, unit, sign convention, missing data format…
- More……

What's New About FP Standard? -- Data Provider's View

- Allow more types of variables, e.g., FCH4, NDVI
- Allow multi-location measurements, e.g., duplicate, profile, tower(s)
- Allow levels of aggregation, e.g., single sensor vs layer aggregated
- Allow both non-filled & gap-filled

- More flexible timeframe for submission/update

Data Submission 101

- Register a user account on AmeriFlux
- Register a new site
- **Format the data according to the upload instructions** for half-hourly / hourly data
- Upload file to the Upload Portal

Upload Data: Half Hourly

< Back

To submit Ameriflux data file(s), please:

- Make sure that your data is in standard Ameriflux format
- Select options below and upload the file(s)

Select Site *

Selected Site: **None** | Type Site ID or name...

BR-Ma2: Manaus - ZF2 K34

BR-Sa1: Santarem-Km67-Primary Forest

BR-Sa3: Santarem-Km83-Logged Forest

CA-Ca1: British Columbia - 1949 Douglas-fir stand

☐ I do not have a Site ID

Gap Filling *

○ **No** gaps are filled

○ **Some or all** gaps are filled

Data File(s) to Upload *(200 MB size limit per file)

Add File(s) ?

Description *

Notes about this data upload. These notes help us process the data correctly.

File Containing Description of this Upload

Add File

By clicking Upload, I acknowledge that I have read and agreed to the Ameriflux Data Policy.

Upload | Clear All Files

If you have questions, please contact us at ameriflux-support@lbl.gov. For more information see About Data and How to Upload/Download Data.

https://ameriflux.lbl.gov/data/upload-data/

Data Submission 101

Home | About | Community | Sites | Data | Tech | Year of Methane | R

Home / Half-Hourly / Hourly Data Upload Format

Half-Hourly / Hourly Data Upload Format

[pdf]

This document describes variable labels and file formatting (FP-In) for uploading continuously sampled data to AmeriFlux and the European Fluxes databases.

Use these instructions to prepare BASE-In file(s) containing data that are continuously sampled at half-hourly or hourly intervals* for a certain period of time (e.g., a month, a year). Note: data files must have the same time interval between any two sequential values.

We refer to general formats described in *Data Variables* and add additional instructions specific to uploading for:

- Data processing
- Temporal representativeness and timestamps
- File format and content
- Data Variable: Base names
- Data Variable: Qualifiers

* Contact ameriflux-support@lbl.gov if you need to upload data reported at other intervals.

https://ameriflux.lbl.gov/half-hourly-hourly-data-upload-format/

Data Submission 101 -- File Format Specifications

- ASCII, comma delimited file (CSV), no quotes
- Filename: <site>_<resolution>_<ts-start>_<ts-end>_<optional>.csv
  - e.g., US-CRT_HH_201701010000_201801010000.csv
- Single row header, no unit row
- All years in single file
  - Multiple files zipped

TIMESTAMP_START	TIMESTAMP_END	CO2	FC	USTAR	TA_1_1_1	WD	WS	NEE
200401010000	200401010030	-9999	-9999	-9999	-9999	-9999	-9999	-9999
200401010030	200401010100	-9999	-9999	-9999	-9999	-9999	-9999	-9999
200401010100	200401010130	371.419	0.561	0.099	-1.172	108.304	1.19	0.563
200401010130	200401010200	371.117	0.424	0.065	-1.049	124.224	1.39	-0.287
200401010200	200401010230	-9999	-9999	-9999	-1.109	-9999	-9999	-9999
200401010230	200401010300	372.87	0.106	0.054	-2.228	8.094	1.387	-0.145
200401010300	200401010330	373.339	0.406	0.066	-2.525	24.062	1.483	0.738
200401010330	200401010400	373.661	1.225	0.013	-2.287	24.261	1.763	1.639
200401010400	200401010430	374.326	0.847	0.029	-2.483	42.956	1.259	1.395
200401010430	200401010500	-9999	-9999	-9999	-1.829	-9999	-9999	-9999
200401010500	200401010530	374.452	0.908	0.066	-2.456	199.948	1.393	1.497
200401010530	200401010600	-9999	-9999	-9999	-2.668	-9999	-9999	-9999
200401010600	200401010630	375.59	1.015	0.061	-2.986	342.969	1.548	2.051
200401010630	200401010700	378.311	0.78	0.024	-3.377	311.023	1.015	3.541
200401010700	200401010730	382.137	0.49	0.117	-3.283	341.725	1.61	1.473
200401010730	200401010800	380.643	0.642	0.127	-3.237	336.543	1.472	-0.551

Data Submission 101 -- Time Keeping Format

- ISO time format: **YYYYMMDDHHMM**, e.g., 201810220930,
- **TIMESTAMP_START** and **TIMESTAMP_END** always in first two columns.
- Use local standard time (No daylight savings)
- No missing time stamp
- Include leap year

!! Scientific Notation !!
201910280000 -> 2019E8 -> 201900000000

TIMESTAMP_START	TIMESTAMP_END	CO2	FC	USTAR	TA_1_1_1	WD	WS	NEE
[illegible]	[illegible]030	-9999	-9999	-9999	-9999	-9999	-9999	-9999
[illegible]	[illegible]100	-9999	-9999	-9999	-9999	-9999	-9999	-9999
[illegible]	[illegible]130	371.419	0.561	0.099	-1.172	108.304	1.19	0.563
[illegible]	[illegible]200	371.117	0.424	0.065	-1.049	124.224	1.39	-0.287
200401010200	200401010230	-9999	-9999	-9999	-1.109	-9999	-9999	-9999
200401010230	200401010300	372.87	0.106	0.054	-2.228	8.094	1.387	-0.145
200401010300	200401010330	373.339	0.406	0.066	-2.525	24.062	1.483	0.738
200401010330	200401010400	373.661	1.225	0.013	-2.287	24.261	1.763	1.639
200401010400	200401010430	374.326	0.847	0.029	-2.483	42.956	1.259	1.395
200401010430	200401010500	-9999	-9999	-9999	-1.829	-9999	-9999	-9999
200401010500	200401010530	374.452	0.908	0.066	-2.456	199.948	1.393	1.497
200401010530	200401010600	-9999	-9999	-9999	-2.668	-9999	-9999	-9999
200401010600	200401010630	375.59	1.015	0.061	-2.986	342.969	1.548	2.051
200401010630	200401010700	378.311	0.78	0.024	-3.377	311.023	1.015	3.541
200401010700	200401010730	382.137	0.49	0.117	-3.283	341.725	1.61	1.473
200401010730	200401010800	380.643	0.642	0.127	-3.237	336.543	1.472	-0.551

Data Submission 101 -- Missing Values

- Missing value : **-9999**

Not accepted:

- -9999.0000 (warning)
- Inf / -Inf
- Empty values
- -6999
- NA
- NaN
- na
- 9999
- -10000
- -999900
- -999
- ……

TIMESTAMP_START	TIMESTAMP_END	CO2	FC	USTAR	TA_1_1_1	WD	WS	NEE
200401010000	200401010030	-9999	-9999	-9999	-9999	-9999	-9999	-9999
200401010030	200401010100	-9999	-9999	-9999	-9999	-9999	-9999	-9999
200401010100	200401010130	371.419	0.561	0.099	-1.172	108.304	1.19	0.563
200401010130	200401010200	371.117	0.424	0.065	-1.049	124.224	1.39	-0.287
200401010200	200401010230	-9999	-9999	-9999	-1.109	-9999	-9999	-9999
200401010230	200401010300	372.87	0.106	0.054	-2.228	8.094	1.387	-0.145
200401010300	200401010330	373.339	0.406	0.066	-2.525	24.062	1.483	0.738
200401010330	200401010400	373.661	1.225	0.013	-2.287	24.261	1.763	1.639
200401010400	200401010430	374.326	0.847	0.029	-2.483	42.956	1.259	1.395
200401010430	200401010500	-9999	-9999	-9999	-1.829	-9999	-9999	-9999
200401010500	200401010530	374.452	0.908	0.066	-2.456	199.948	1.393	1.497
200401010530	200401010600	-9999	-9999	-9999	-2.668	-9999	-9999	-9999
200401010600	200401010630	375.59	1.015	0.061	-2.986	342.969	1.548	2.051
200401010630	200401010700	378.311	0.78	0.024	-3.377	311.023	1.015	3.541
200401010700	200401010730	382.137	0.49	0.117	-3.283	341.725	1.61	1.473
200401010730	200401010800	380.643	0.642	0.127	-3.237	336.543	1.472	-0.551

Data Submission 101 -- Data Preparation

- Standard unit, sign convention
- Data is “cleaned”: outliers, erroneous data removed (e.g., ITC - Stationary QC Flag)
- Do not u* filter flux variables
- Non-filled flux variables required; Great to also provide gap-filled

TIMESTAMP_START	TIMESTAMP_END	CO2	FC	USTAR	TA_1_1_1	WD	WS	NEE
200401010000	200401010030	-9999	-9999	-9999	-9999	-9999	-9999	-9999
200401010030	200401010100	-9999	-9999	-9999	-9999	-9999	-9999	-9999
200401010100	200401010130	371.419	0.561	0.099	-1.172	108.304	1.19	0.563
200401010130	200401010200	371.117	0.424	0.065	-1.049	124.224	1.39	-0.287
200401010200	200401010230	-9999	-9999	-9999	-1.109	-9999	-9999	-9999
200401010230	200401010300	372.87	0.106	0.054	-2.228	8.094	1.387	-0.145
200401010300	200401010330	373.339	0.406	0.066	-2.525	24.062	1.483	0.738
200401010330	200401010400	373.661	1.225	0.013	-2.287	24.261	1.763	1.639
200401010400	200401010430	374.326	0.847	0.029	-2.483	42.956	1.259	1.395
200401010430	200401010500	-9999	-9999	-9999	-1.829	-9999	-9999	-9999
200401010500	200401010530	374.452	0.908	0.066	-2.456	199.948	1.393	1.497
200401010530	200401010600	-9999	-9999	-9999	-2.668	-9999	-9999	-9999
200401010600	200401010630	375.59	1.015	0.061	-2.986	342.969	1.548	2.051
200401010630	200401010700	378.311	0.78	0.024	-3.377	311.023	1.015	3.541
200401010700	200401010730	382.137	0.49	0.117	-3.283	341.725	1.61	1.473
200401010730	200401010800	380.643	0.642	0.127	-3.237	336.543	1.472	-0.551

Data Submission 101 – Variable Naming

Base Name	Qualifiers

<Base name>_<General>_<Positional or Aggregation>

General

_F = Gap-filled

Positional / Aggregation

_*H*_*V*_*R* = Single sensor / position

_*H*_*V*_A = Replicate aggregation

_# = Layer aggregation

Data Submission 101 – Variable Naming

Base Name	Qualifiers

<Base name>_<General>_<Positional or Aggregation>

FC_1_1_1 → FC

FC_F_1_1_1 → FC_F

TA_1_1_1
TA_1_1_2
TA_1_1_A
TA_4

} Coexist

Data Submission 101 – Any Required Variable?

MANDATORY

FC
CO2 or SC
USTAR
WS
SW_IN or PPFD_IN
TA
H2O or RH or VPD

VERY IMPORTANT

LE
H
G
SWC
TS
WD
PA
P, P_RAIN, or P_SNOW
ZL
SW_OUT
NETRAD
SW_DIF
APAR
FAPAR
LW_IN
LW_OUT

Supported BASE Variables

GAS, FLUX, STORAGE

CO2, CO2_SIGMA FC, SC
CH4, FCH4, SCH4
CO, FCO, SCO
CO2C13
N2O, FN2O, SN2O
NO, FNO, SNO
NO2, FNO2, SNO2
O3, FO3, SO3
H2O, H2O_SIGMA

ENERGY FLUX, STORAGE

H, SH
LE, SLE
G, SG
SB

ECOLOGICAL PROC

GPP
NEE
RECO

QC, FOOTPRINT

FC_SSITC_TEST
FCH4_SSITC_TEST
FN2O_SSITC_TEST
FNO_SSITC_TEST
FNO2_SSITC_TEST
FO3_SSITC_TEST
H_SSITC_TEST
LE_SSITC_TEST
TAU_SSITC_TEST
FETCH_70, 80, 90, MAX
FETCH_FILTER

SOIL/WATER

SWC
SWP
TS
TSN
TW
WTD

METEO

TA
VPD, RH
P, P_RAIN, P_SNOW
MO_LENGTH, ZL
PA
PBLH
T_SONIC, T_SONIC_SIGMA
USTAR, TAU
U_SIGMA
V_SIGMA
W_SIGMA
WD
WS, WS_MAX

BIO/ECO/HYDROL

DBH
LEAF_WET
SAP_FLOW, SAP_DT
STEMFLOW
T_CANOPY, T_BOLE
THROUGHFALL
D_SNOW
RUNOFF

RADIATION

ALB, NETRAD
SW_DIF, SW_DIR
SW_IN, SW_BC_IN
SW_OUT, SW_BC_OUT
LW_IN, LW_BC_IN
LW_OUT, LW_BC_OUT

APAR, FAPAR, FIPAR
PPFD_DIF, PPFD_DIR
PPFD_IN, PPFD_BC_IN
PPFD_OUT, PPFD_BC_OUT

NDVI, PRI
R_UVA, R_UVB
SPEC_NIR_IN
SPEC_NIR_OUT
SPEC_NIR_REFL
SPEC_PRI_REF_IN
SPEC_PRI_REF_OUT
SPEC_PRI_REF_REFL
SPEC_PRI_TGT_IN
SPEC_PRI_TGT_OUT
……

What’s in BASE now?

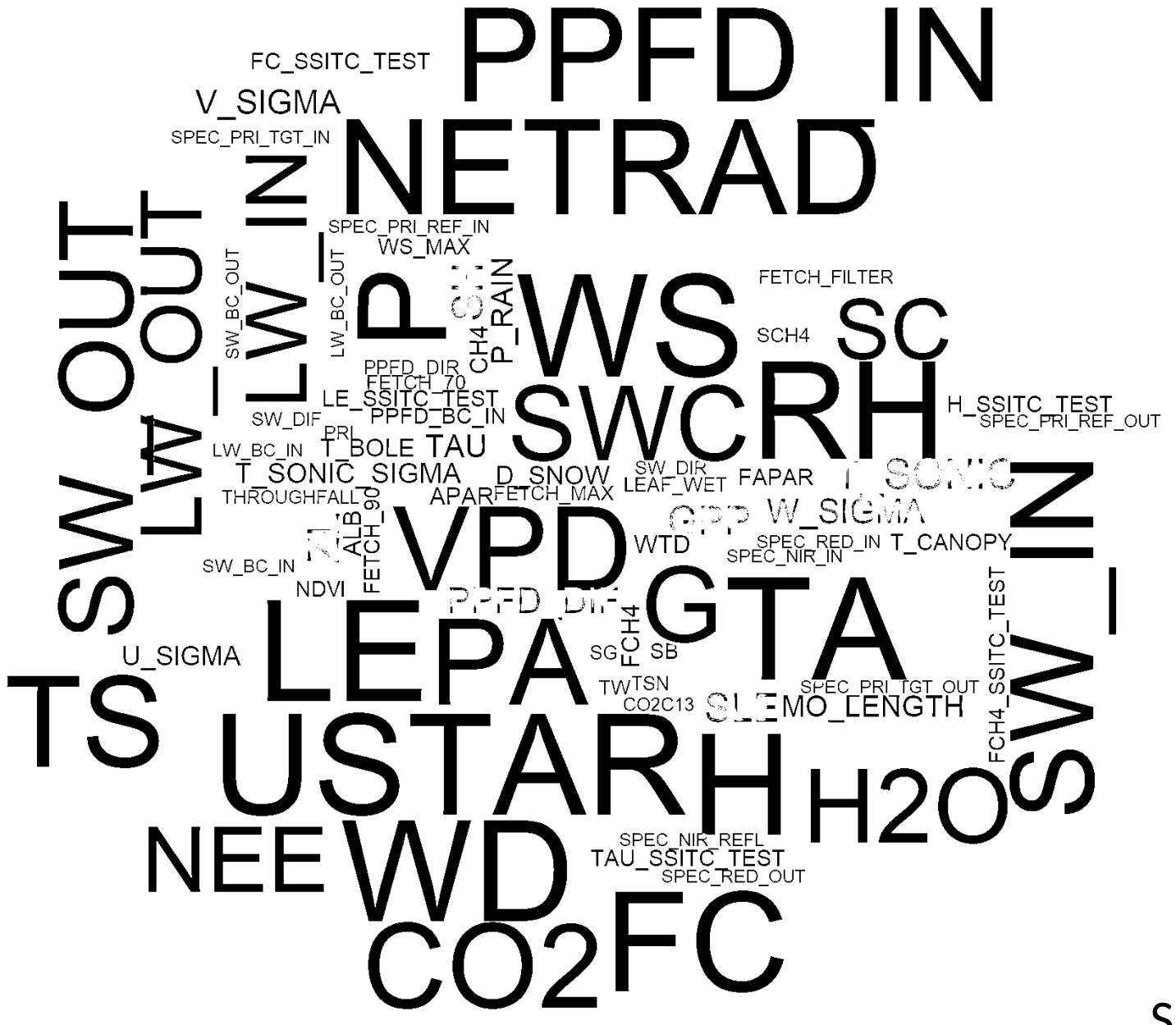

Site × Years

Data Submission 101 – Most Common Format Issue

- Unit
  - Ratio vs Percentage
    - ALB, FAPAR, SWC, RH, LEAF_WET
  - Metric Prefix
    - VPD (hPA), PA (kPa)
    - CH4 (nmol/mol), FCH4 (nmol/m2/s)
  - Kelvin vs degree C

- Sign Convention
  - TAU, GPP, WTD, G

- _SIGMA (standard deviation vs variance)
  - CO2_SIGMA, H2O_SIGMA, V_SIGMA, T_SONIC_SIGMA

Data Submission 101 – Practical Tips

Where to Start ?

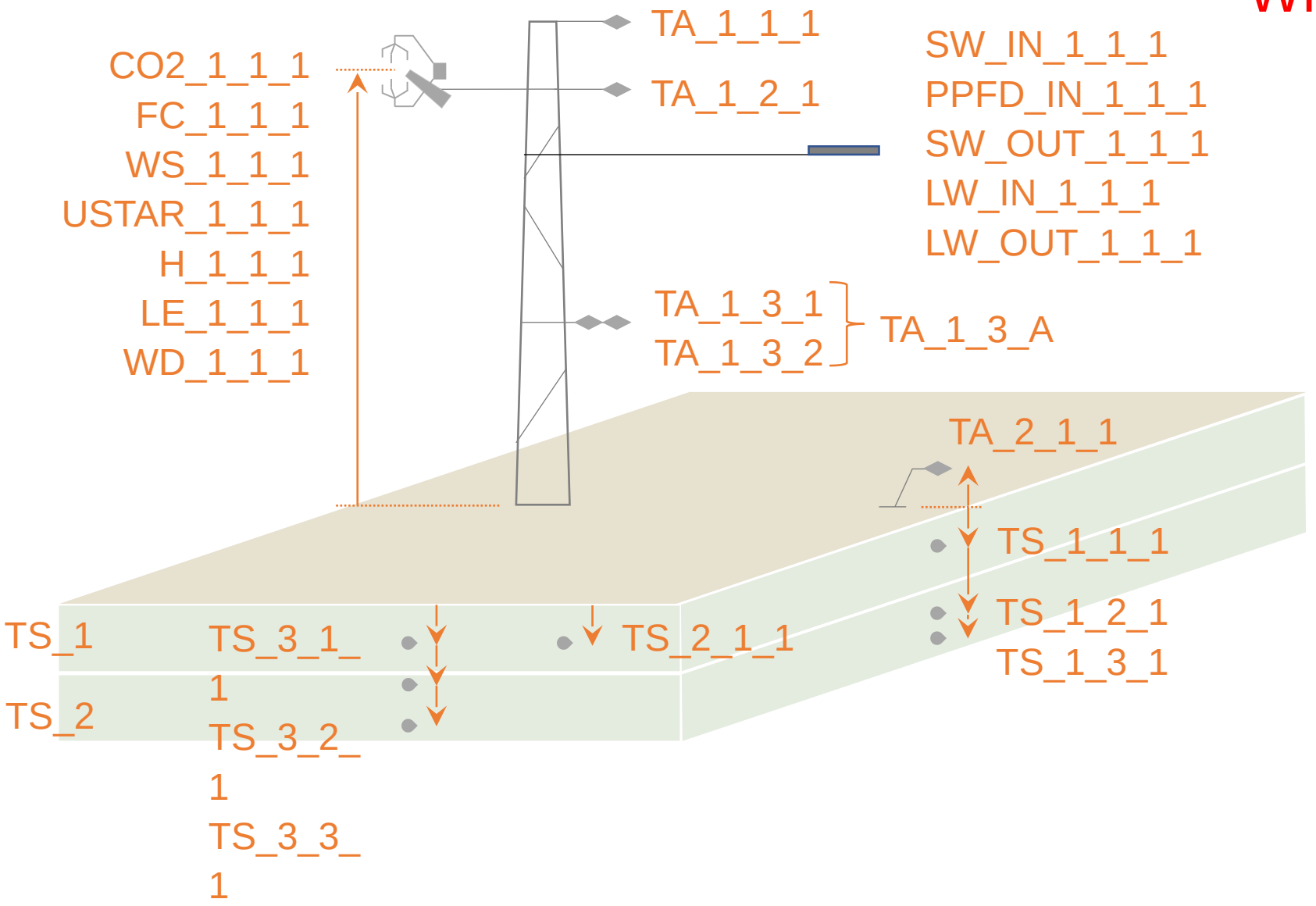

Data Submission 101 – Practical Tips

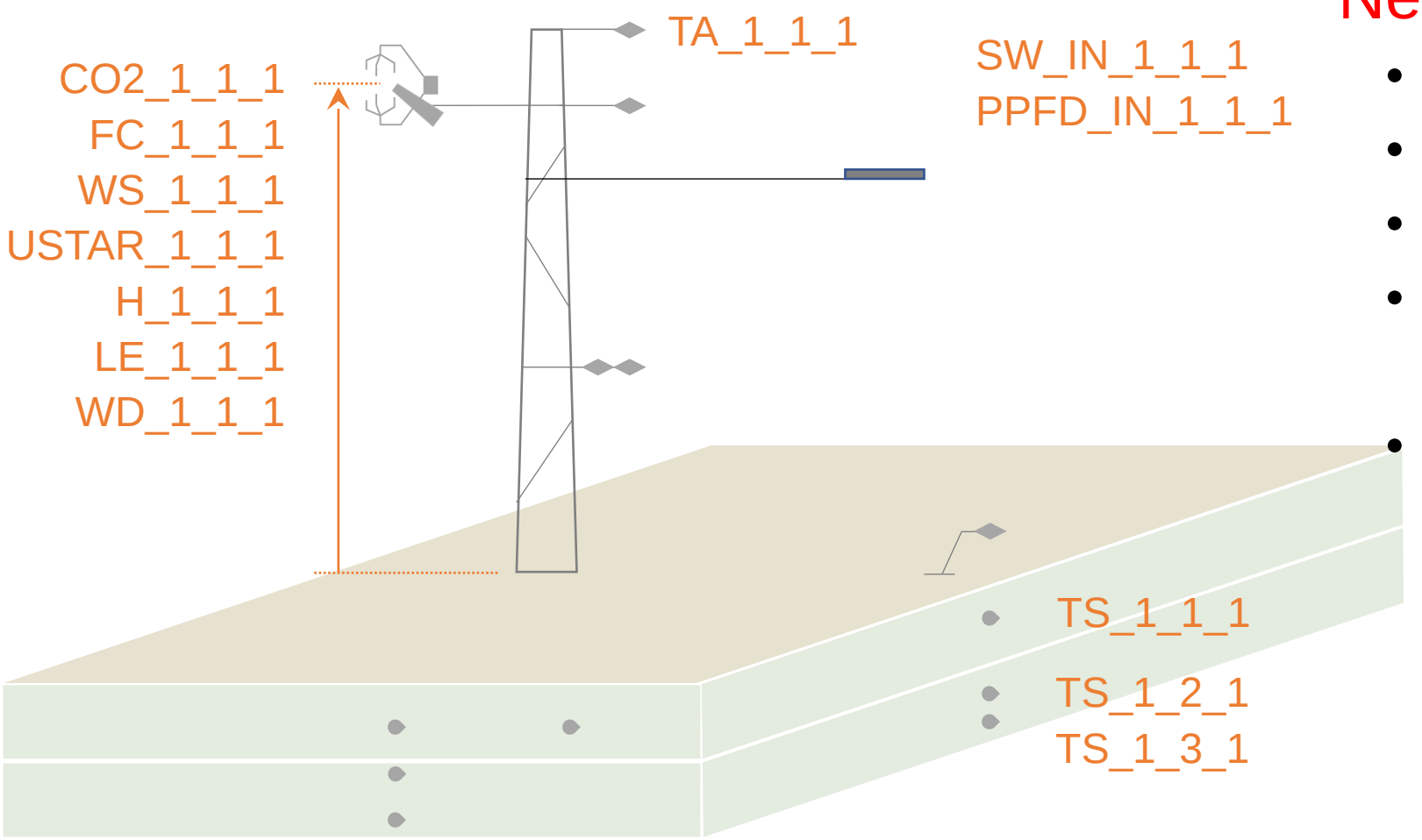

New Site

- Start with key variables
- Use _H_V_R qualifier
- Upload data
- Passed Format & Data QAQC
- Enter Variable Info

Data Submission 101 – Practical Tips

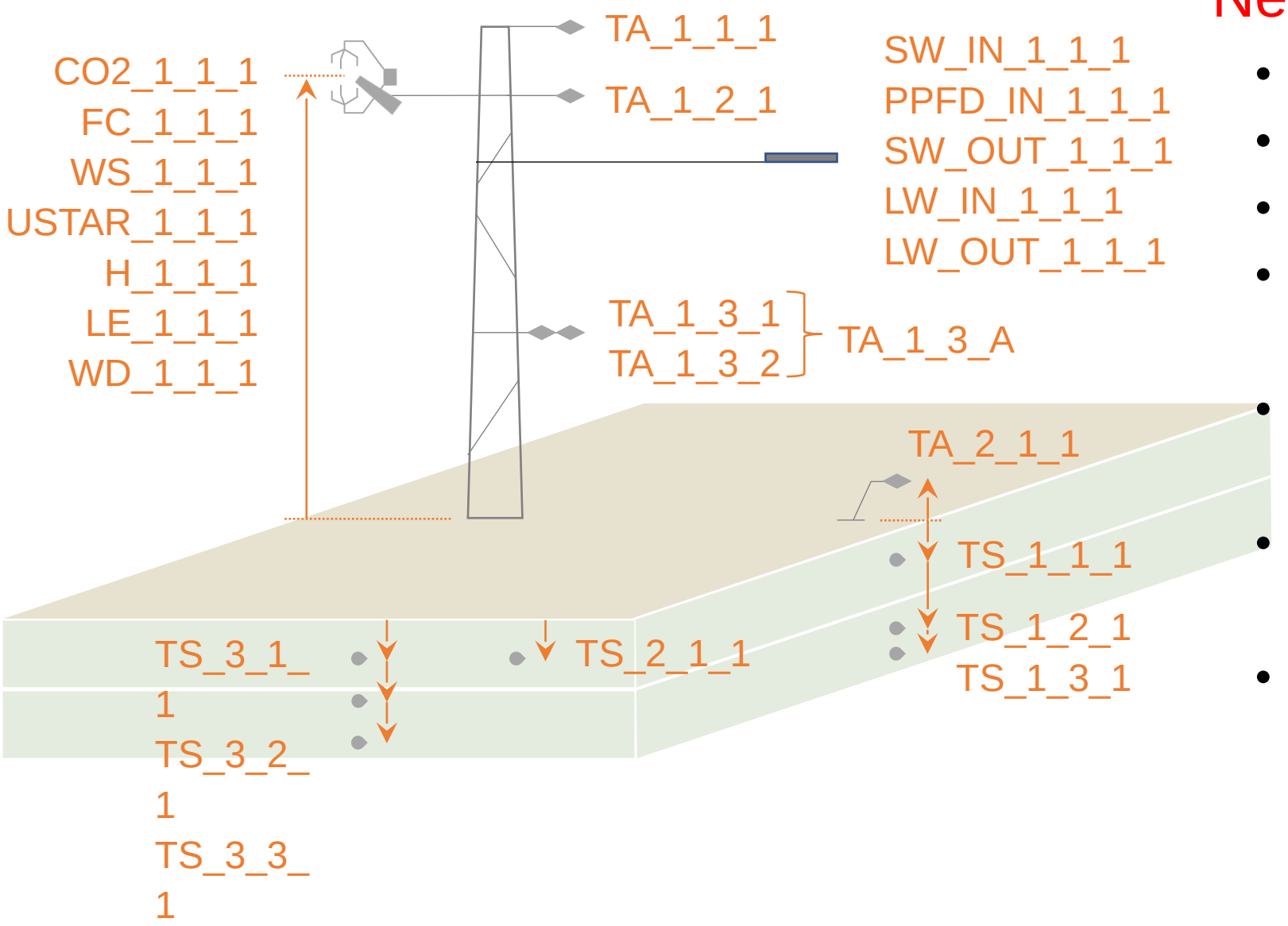

New Site

- Start with key variables
- Use _H_V_R qualifier
- Upload data
- Passed Format & Data QAQC
- Enter Variable Info

- Upload replacement with additional variables
- Update Variable Info

Data Submission 101 – Practical Tips

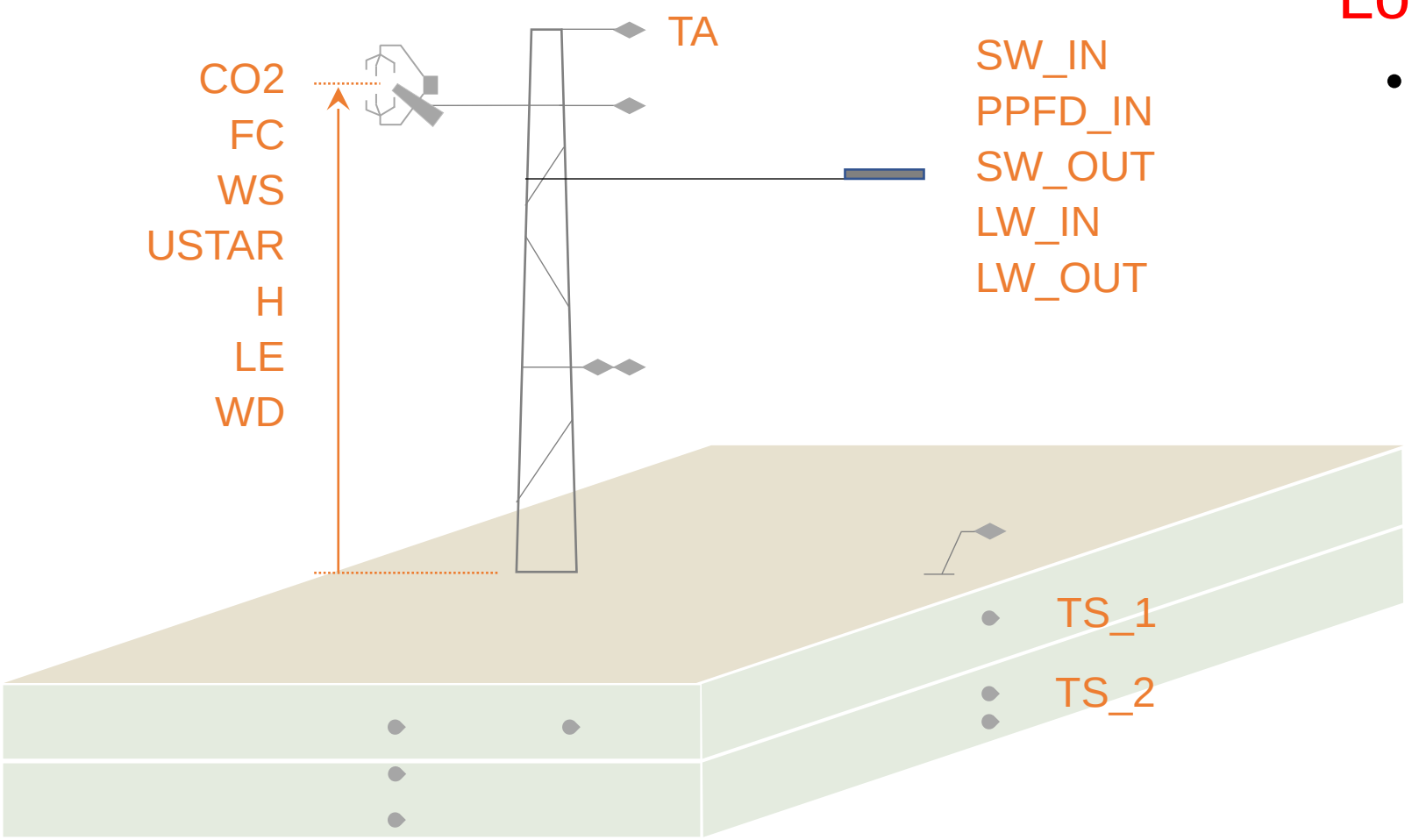

Long-Running Site

- With previous BASE

Data Submission 101 – Practical Tips

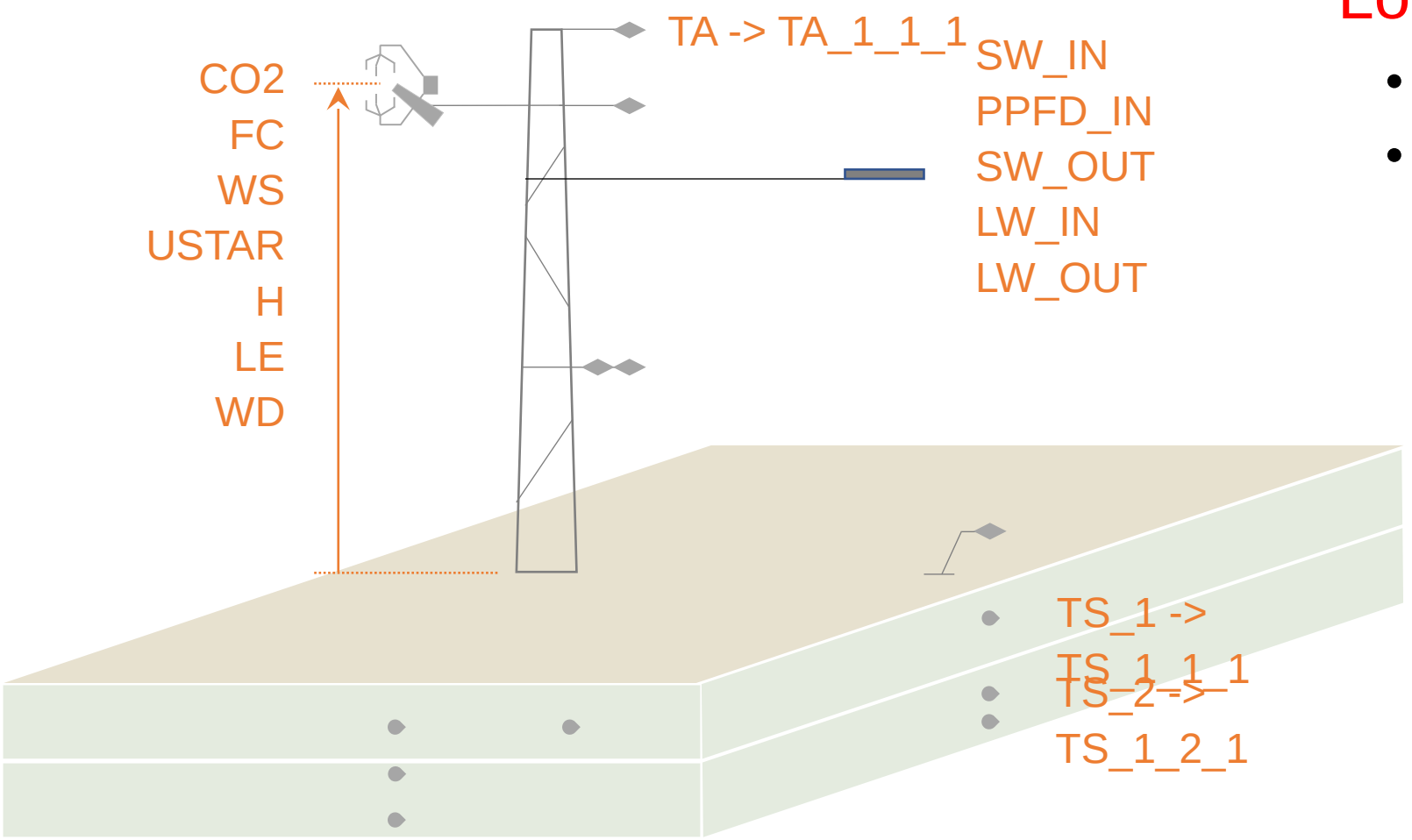

Long-Running Site

- Start with variable mapping
- Revise variable name in existing BASE

Data Submission 101 – Practical Tips

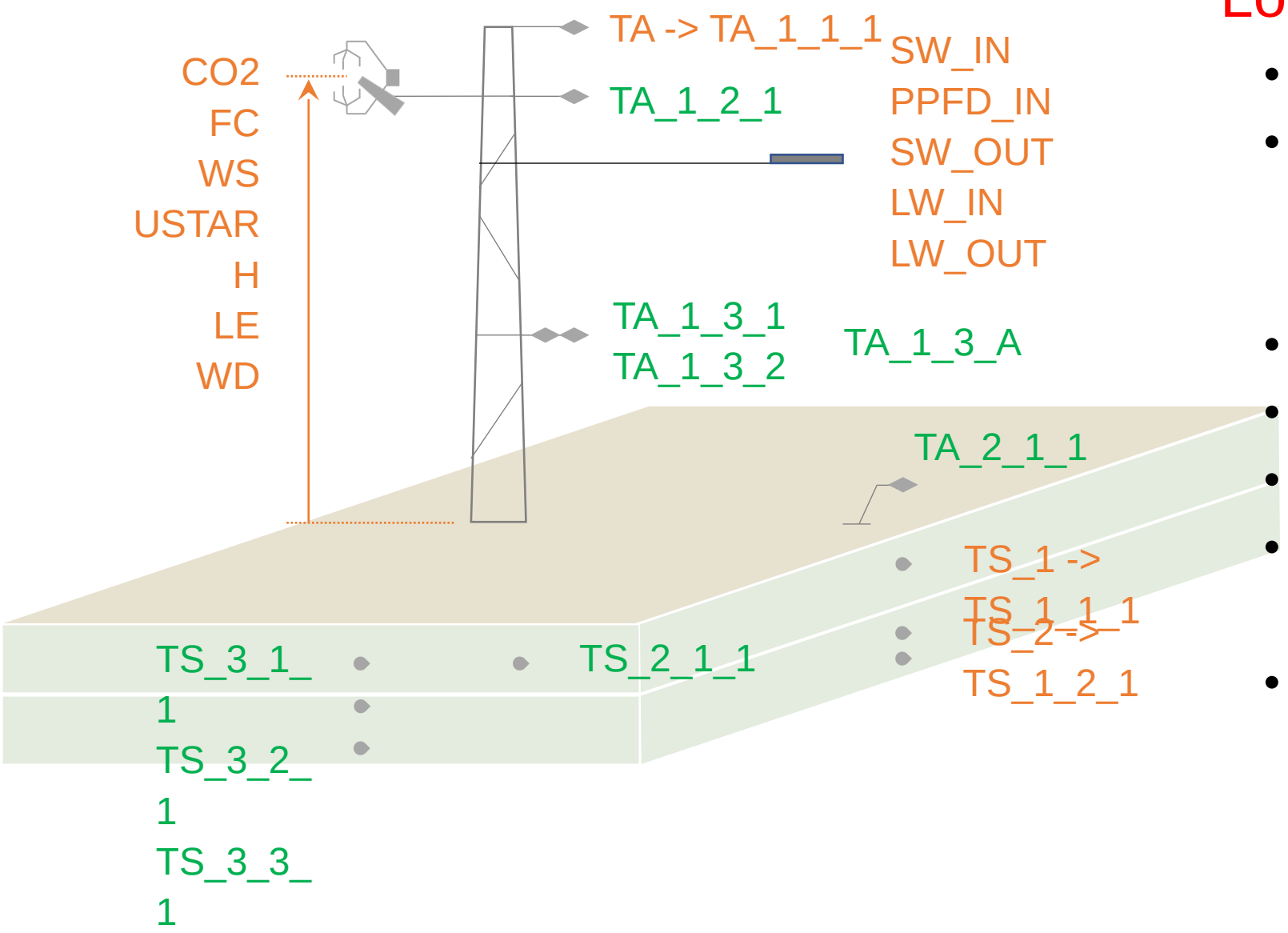

Long-Running Site

- Start with variable mapping
- Revise variable name in existing BASE

- Work on the latest years
- Use _H_V_R qualifier
- Upload data
- Passed Format & Data QAQC
- Enter Variable Info

Data Submission 101 – Practical Tips

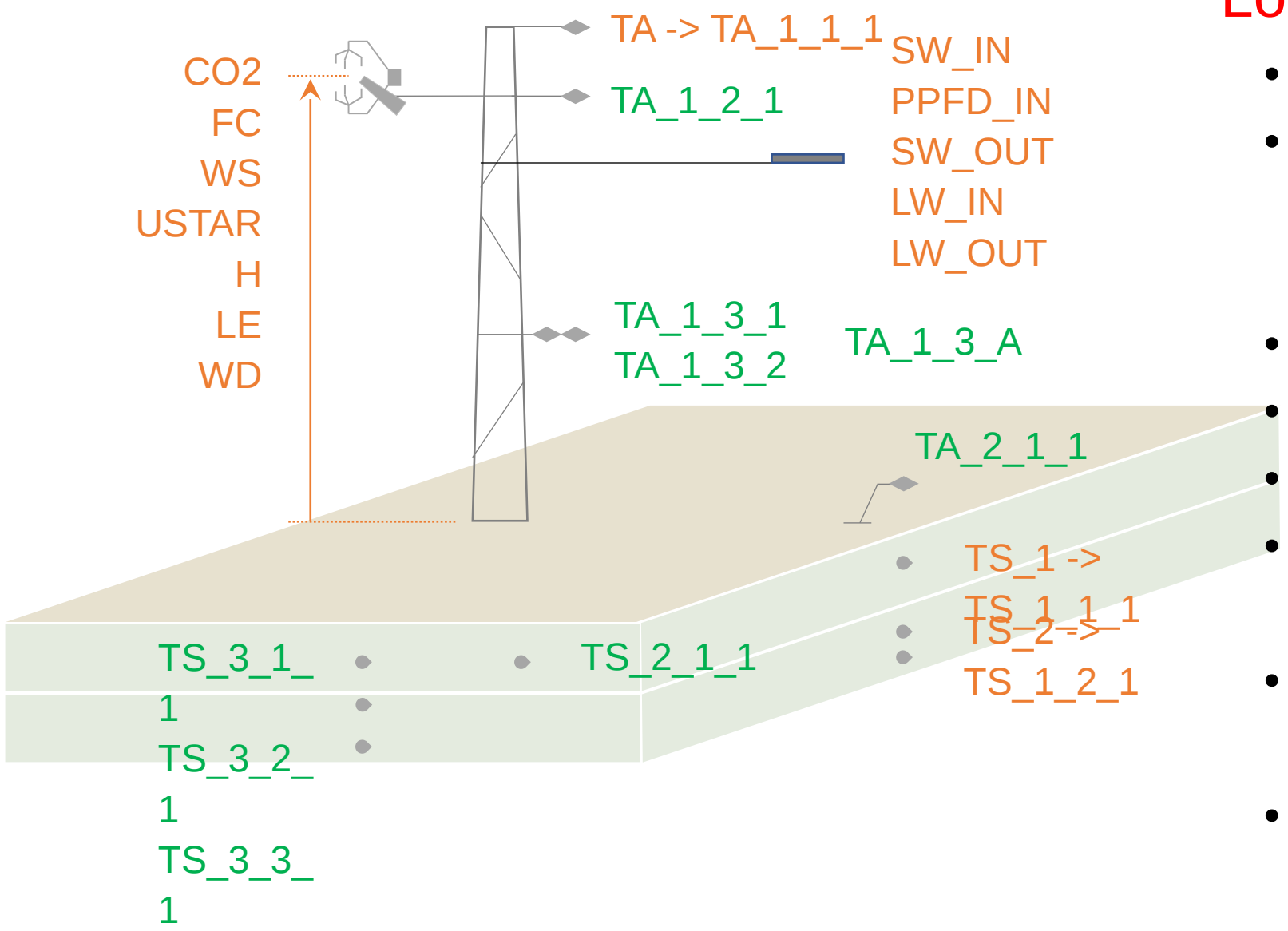

Long-Running Site

- Start with variable mapping
- Revise variable name in existing BASE

- Work on the latest years
- Use _H_V_R qualifier
- Upload data
- Passed Format & Data QAQC
- Enter Variable Info

- Incrementally replace early years with additional variable